YAMAHA

SERVICE MANUAL

VX600ERG
SX600G
MM600G
VT600G

LIT-12618-02-20

8EA-28197-10

981059

NOTICE

This manual was written by the Yamaha Motor Company primarily for use by Yamaha dealers and their qualified mechanics. It is not possible to put an entire mechanic's education into one manual, so it is assumed that persons using this book to perform maintenance and repairs on Yamaha snowmobiles have a basic understanding of the mechanical concepts and procedures inherent in snowmobile repair. Without such knowledge, attempted repairs or service to this model may render it unfit and/or unsafe to use.
Yamaha Motor Company, Ltd. is continually striving to improve all models manufactured by Yamaha. Modifications and significant changes in specifications or procedures will be forwarded to all authorized Yamaha dealers and will, where applicable, appear in future editions of this manual.

VX600ER, SX600, MM600, VT600
SERVICE MANUAL

1st Edition, June 2001

Printed in U.S.A.
P/N.LIT-12618-02-20

HOW TO USE THIS MANUAL

Particularly important information is distinguished in this manual by the following notations:

⚠
The Safety Alert Symbol means ATTENTION! BE ALERT! YOUR SAFETY IS INVOLVED!

⚠ WARNING

Failure to follow WARNING instructions could result in severe injury or death to the snowmobile operator, a bystander, or a person inspecting or repairing the snowmobile.

CAUTION:

A CAUTION indicates special precautions that must be taken to avoid damage to the snowmobile.

NOTE:

A NOTE provides key information that can make procedures easier or clearer.

MANUAL FORMAT

All of the procedures in this manual are organized in a sequential, step-by-step format. The information has been compiled to provide the mechanic with an easy to read, handy reference that contains comprehensive explanations of all inspection, repair, assembly, and disassembly operations.
In this revised format, the condition of a faulty component will precede an arrow symbol and the course of action required to correct the problem will follow the symbol, e.g.,

- Bearings
  Pitting/damage → Replace.

EXPLODED DIAGRAM

Each chapter provides exploded diagrams before each disassembly section to facilitate correct disassembly and assembly procedures.

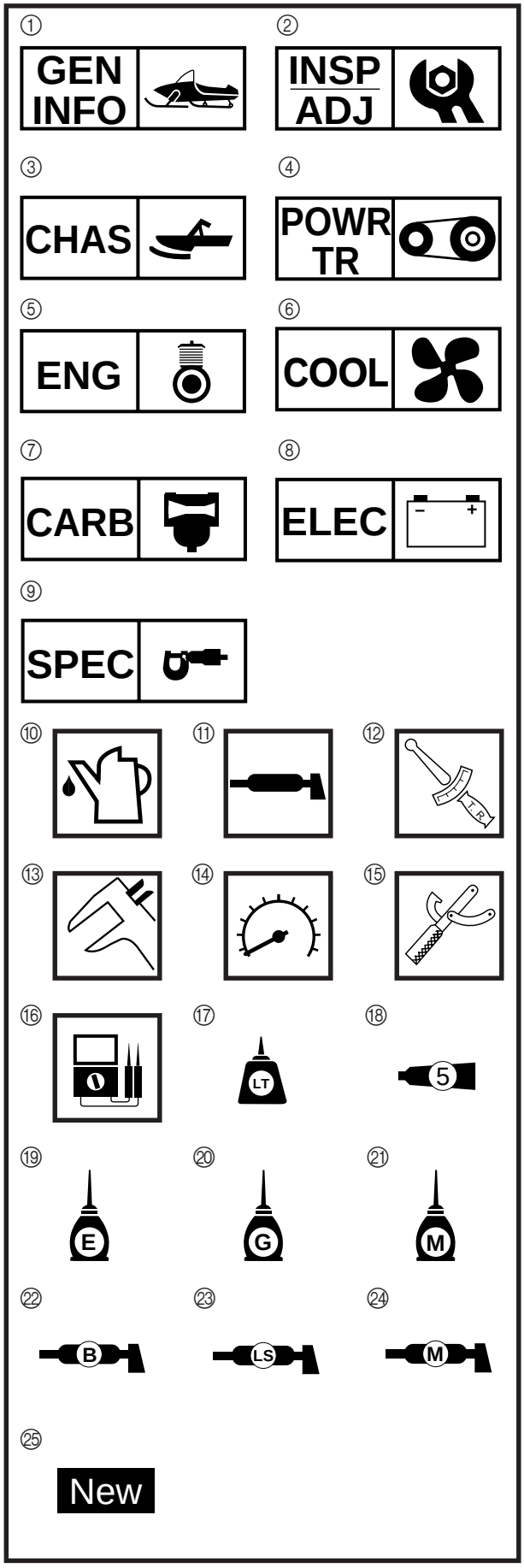

ILLUSTRATED SYMBOLS
(Refer to the illustration)

Illustrated symbols ① to ⑨ are designed as thumb tabs to indicate the chapter's number and content.

① General information
② Periodic inspection and adjustment
③ Chassis
④ Power train
⑤ Engine
⑥ Cooling system
⑦ Carburetion
⑧ Electrical
⑨ Specifications

Illustrated symbols ⑩ to ⑯ are used to identify the specifications which appear.

⑩ Filling fluid
⑪ Lubricant
⑫ Tightening
⑬ Wear limit, clearance
⑭ Engine speed
⑮ Special tool
⑯ Ω, V, A

Illustrated symbols ⑰ to ㉕ in the exploded diagram indicate grade of lubricant and location of lubrication point.

⑰ Apply locking agent (LOCTITE®)
⑱ Apply Yamabond No.5®
⑲ Apply engine oil
⑳ Apply gear oil
㉑ Apply molybdenum disulfide oil
㉒ Apply wheel bearing grease
㉓ Apply low-temperature lithium-soap base grease
㉔ Apply molybdenum disulfide grease
㉕ Use new one

INDEX

CHAPTER 1.
GENERAL INFORMATION

CHAPTER 2.
PERIODIC INSPECTION AND ADJUSTMENT

CHAPTER 3.
CHASSIS

CHAPTER 4.
POWER TRAIN

CHAPTER 5.
ENGINE

CHAPTER 6.
COOLING SYSTEM

CHAPTER 7.
CARBURETION

CHAPTER 8.
ELECTRICAL

CHAPTER 9.
SPECIFICATIONS

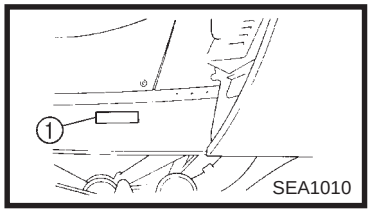

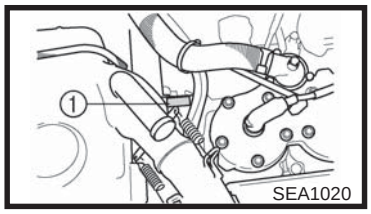

GENERAL INFORMATION

MACHINE IDENTIFICATION

FRAME SERIAL NUMBER

The frame serial number ① is located on the right-hand side of the frame (just below the front of the seat).

ENGINE SERIAL NUMBER

The engine serial number ① is located on the right-hand side of the crankcase.

NOTE:

Designs and specifications are subject to change without notice.

IMPORTANT INFORMATION

PREPARATION FOR REMOVAL AND DISASSEMBLY

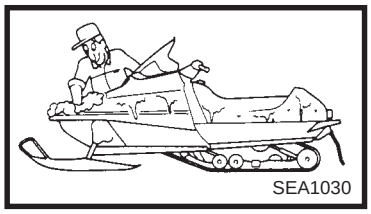
SEA1030

1. Remove all dirt, mud, dust, and foreign material before removal and disassembly.
   While cleaning, take care to protect the electrical parts, such as relays, switches, motor, resistors, controllers, etc., from high pressure water splashes.

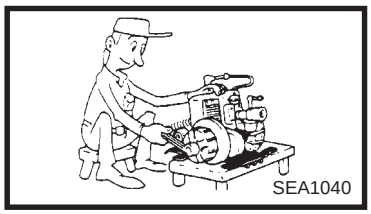
SEA1040

2. Use proper tools and cleaning equipment.
   Refer to “SPECIAL TOOLS”.


SEA1050

3. When disassembling the machine, keep mated parts together. This includes gears, cylinders, pistons, and other parts that have been “mated” through normal wear. Mated parts must be reused or replaced as an assembly.

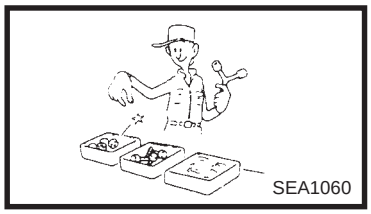
SEA1060

4. During disassembly of the machine, clean all parts and place them in trays in the order of disassembly. This will speed up assembly time and help ensure that all parts are reinstalled correctly.

5. Keep all parts away from any source of fire.

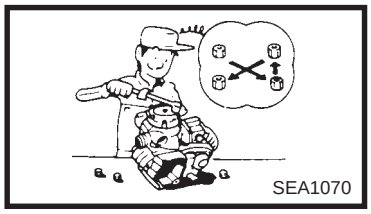
SEA1070

6. Be sure to keep to the tightening torque specifications. When tightening bolts, nuts, and screws, start with those that have larger diameters, and proceed from the inside to the outside in a crisscross pattern.

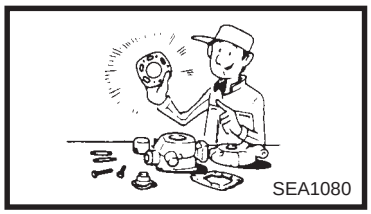
SEA1080

ALL REPLACEMENT PARTS

We recommend using genuine Yamaha parts for all replacements. Use oil and grease recommended by Yamaha for assembly and adjustments.

GASKETS, OIL SEALS, AND O-RINGS

1. All gaskets, seals, and O-rings should be replaced when an engine is overhauled. All gasket surfaces, oil seal lips, and O-rings must be cleaned.
2. Properly oil all mating parts and bearings during reassembly. Apply grease to the oil seal lips.

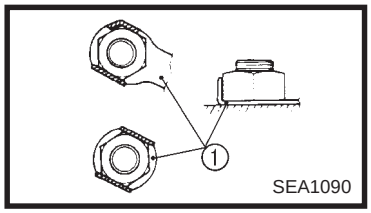

LOCK WASHERS/PLATES AND COTTER PINS

All lock washers/plates ① and cotter pins must be replaced if they are removed. Lock tab(s) should be bent along the bolt or nut flat(s) after the bolt or nut has been properly tightened.

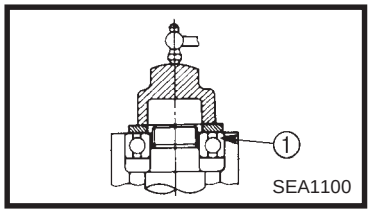

BEARINGS AND OIL SEALS

Install the bearings ① and oil seals ② with their manufacturer's marks or numbers facing outwards. (In other words, the stamped letters must be on the side exposed to view.) When installing oil seals, apply a light coating of lightweight lithium base grease to the seal lips. Oil the bearings liberally when installing.

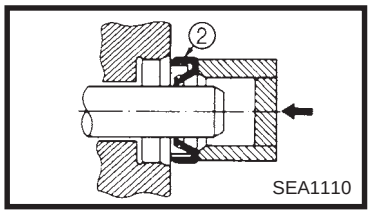

CAUTION:

Do not use compressed air to spin the bearings dry. This causes damage to the surface of the bearings.

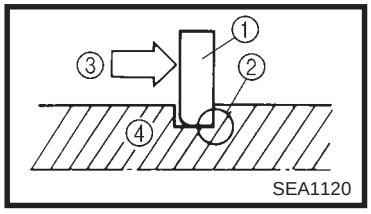

CIRCLIPS

All circlips should be inspected carefully before reassembly. Always replace piston pin clips after one use. Replace misshapen circlips. When installing a circlip ①, make sure that the sharp edged corner ② is positioned opposite to the thrust ③ it receives. See the sectional view.

④ Shaft

LOCTITE®

After installing fasteners that have LOCTITE® applied, wait 24 hours before using the machine. This will give the LOCTITE® time to dry properly.

SPECIAL TOOLS

Some special tools are necessary for a completely accurate tune-up and assembly. Using the correct special tool will help prevent damage that can be caused by the use of improper tools or improvised techniques.

NOTE:

Be sure to use the correct part number when ordering the tool, since the part number may differ according to country.

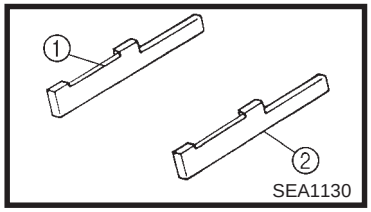

SEA1130

FOR TUNE UP

- Sheave gauge
  P/N: YS-42421-1 (15 mm offset) ①
  YS-42421-2 (20 mm offset) ②

This gauge is used to measure the sheave distance and for offset adjustment.

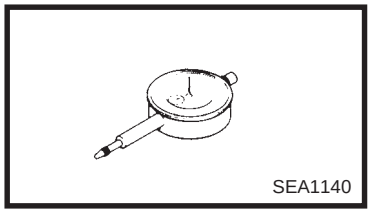
SEA1140

- Dial gauge
  P/N: YU-03097 (for U.S.A./Canada)
  90890-03097 (for Europe)

This gauge is used for run out measurement.

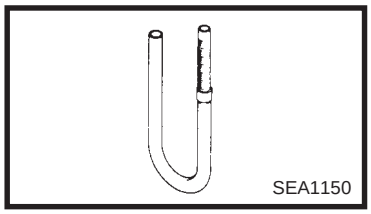
SEA1150

- Fuel level gauge
  P/N: YM-01312-A (for U.S.A./Canada)
  90890-01312 (for Europe)

This gauge is used to measure the fuel level in the float chamber.

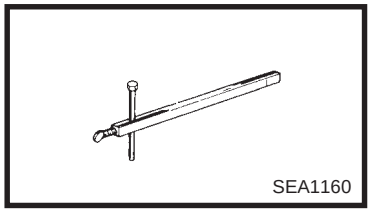
SEA1160

- Distance gauge
  P/N: YS-91047-3 (for U.S.A./Canada)
  90890-01702 (for Europe)

This gauge is used to measure the distance between the center of the primary sheave and the center of the secondary sheave.

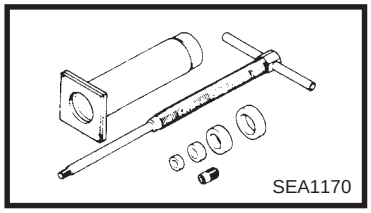

FOR ENGINE SERVICE

- Piston pin puller
  P/N: YU-01304 (for U.S.A./Canada)
  90890-01304 (for Europe)

This tool is used to remove the piston pin.

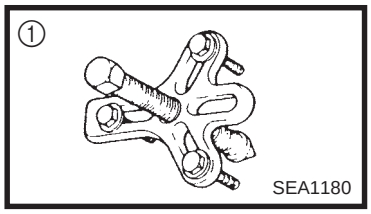

- Rotor holding puller
  P/N: YU-33270 ① (for U.S.A./Canada)
  90890-01362 ② (for Europe)

This tool is used to remove the magneto rotor.

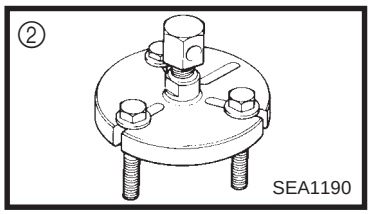

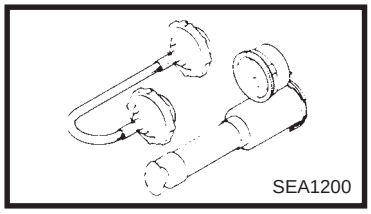

- Cooling system tester
  P/N: YU-24460-01 (for U.S.A./Canada)
  90890-01325 (for Europe)

This tester is used for checking the cooling system.

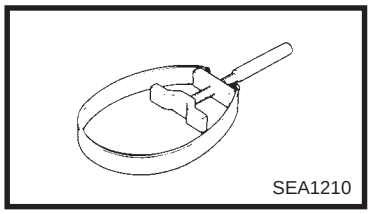

FOR POWER TRAIN SERVICE

- Primary sheave holder
  P/N: YS-01880 (for U.S.A./Canada)
  90890-01701 (for Europe)

This tool is used to hold the primary sheave.

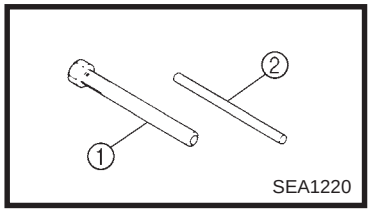

- Primary sheave puller (18 mm)
  P/N: YS-01881-1 ①, YS-01859-1 ②

This tool is used for removing the primary sheave.

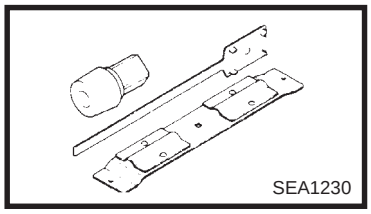

- Clutch spider separator
  P/N: YS-28890-C

This tool is used when disassembling and assembling the primary sheave.

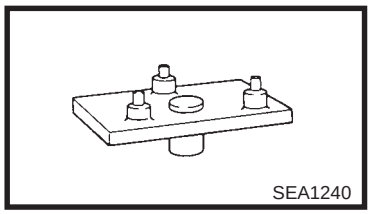

- Clutch separator adapter
  P/N: YS-34480

This tool is used when disassembling and assembling the primary sheave.

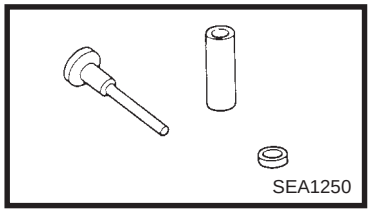
SEA1250

- YXR clutch bushing jig kit
  P/N: YS-39752

This tool is used for removal and installation of primary clutch weight and roller bushings.

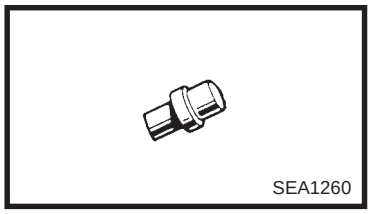
SEA1260

- Clutch bushing press
  P/N: YS-42424

This tool is used for removing and installing the post bushings (primary sheave cap bush, sliding sheave bush and torque cam bush).

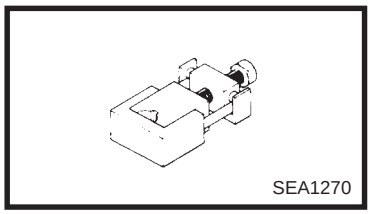
SEA1270

- Track clip installer
  P/N: YS-91045-A

This tool is used for installing the track clip.


SEA1280

- Angle finder
  P/N: YS-42422

This tool is used for checking and adjusting the ski spindle camber.

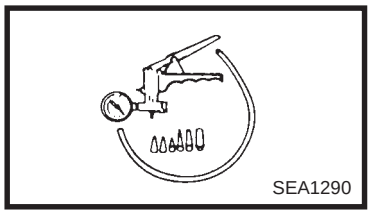
SEA1290

FOR CARBURETION SERVICE

- Mity vac
  P/N: YS-42423 (for U.S.A./Canada)
  90890-06756 (for Europe)

This tool is used to check the fuel pump.

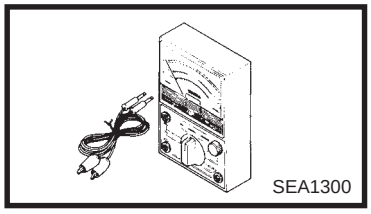
SEA1300

FOR ELECTRICAL SERVICE

- Pocket tester
  P/N: YU-03112 (for U.S.A./Canada)
  90890-03112 (for Europe)

This instrument is necessary for checking the electrical components.

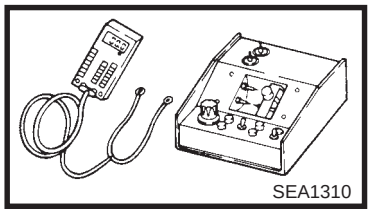
SEA1310

- Electro tester
  P/N: YU-33260-A

This instrument is invaluable for checking the electrical system.

PERIODIC INSPECTION AND ADJUSTMENT

INTRODUCTION

This chapter includes all information necessary to perform recommended inspections and adjustments. These preventive maintenance procedures, if followed, will ensure more reliable machine operation and a longer service life. In addition, the need for costly overhaul work will be greatly reduced. This information applies to machines already in service as well as new machines that are being prepared for sale. All service technicians should be familiar with this entire chapter.

PERIODIC MAINTENANCE TABLE

Item	Remarks	Pre-operation check (Daily)	Initial 1 month or 800 km (500 mi) (40 hr)	Every Seasonally or 3,200 km (2,000 mi) (160 hr)
Spark plugs	Check condition. Adjust gap and clean. Replace if necessary.			●
Engine oil	Check oil level.	●		
	Air bleed the oil pump if necessary.			●
Fuel	Check fuel level.	●		
Fuel filter	Check condition. Replace if necessary.			●
Fuel line	Check fuel hose for cracks or damage. Replace if necessary.			●
Oil line	Check oil hose for cracks or damage. Replace if necessary.			●
Engine coolant	Check coolant level.	●		
	Air bleed the cooling system if necessary.			●
Carburetors	Check throttle lever operation.	●		
	Adjust the jets.	Whenever operating condition (elevation/temperature) is changed.		
Recoil starter	Check operation and rope damage. Replace if necessary.	●		
Engine stop switch	Check operation. Repair if necessary.	●		
Throttle override system (T.O.R.S.)	Check operation. Repair if necessary.	●		
Throttle lever	Check operation. Repair if necessary.	●		
Exhaust system	Check for leakage. Tighten or replace gasket if necessary.			●
Decarbonization	More frequently if necessary.			●
Drive guard	Check for cracks, bends or damage. Replace if necessary.	●		
V-belt	Check for wear and damage. Replace if necessary.	●		
Drive track and idler wheels	Check deflection, and for wear and damage. Adjust/replace if necessary.	●		
Slide runners	Check for wear and damage.	●		
	Replace if necessary.			●
Brake and parking brake	Check operation and fluid leakage.	●		
	Adjust free play and/or replace pads if necessary.			●
	Replace brake fluid.	See NOTE on page 2-2.		

Item	Remarks	Pre-operation check (Daily)	Initial 1 month or 800 km (500 mi) (40 hr)	Every Seasonally or 3,200 km (2,000 mi) (160 hr)
Drive chain oil	Check oil level.		●	
	Replace.			●
Drive chain	Check deflection. Adjust if necessary.	Initial at 500 km (300 mi) and every 800 km (500 mi) thereafter.		
Skis and ski runners	Check for wear and damage.	●		
	Replace if necessary.			●
Steering system	Check operation.	●		
	Adjust toe-out if necessary.			●
Strap (MM600)	Check for damage. Replace if necessary.	●		
Lights	Check operation. Replace bulbs if necessary.	●		
Battery (VT600/VX600ER)	Check fluid level. Add only distilled water if necessary.	●		
	Check specific gravity and breather hose operation. Charge/correct if necessary.			●
Primary and secondary clutches	Check engagement and shift speed. Adjust if necessary.			●
		Whenever operating elevation is changed.		
	Inspect sheaves for wear/damage. Inspect weights/rollers and bushings for wear-for primary. Inspect ramp shoes/bushings for wear-for secondary. Replace if necessary.			●
	Lubricate with specified grease.			●
Steering column bearing	Lubricate with specified grease.			●
Ski and front suspension	Lubricate with specified grease.			●
Suspension component	Lubricate with specified grease.			●
Parking brake cable end and lever end/throttle cable end	Lubricate with specified grease.			●
	Check cable damage. Replace if necessary.			●
Shroud latches	Make sure that the shroud latches are hooked.	●		
Fittings and fasteners	Check tightness. Repair if necessary.	●		
Tool kit and recommended equipment	Check for proper placement.	●		

NOTE:

Brake fluid replacement:

1. When disassembling the master cylinder or caliper cylinder, replace the brake fluid. Normally check the brake fluid level and add the fluid as required.
2. On the inner parts of the master cylinder and caliper cylinder, replace the oil seals every two years.
3. Replace the brake hoses every four years, or if cracked or damaged.

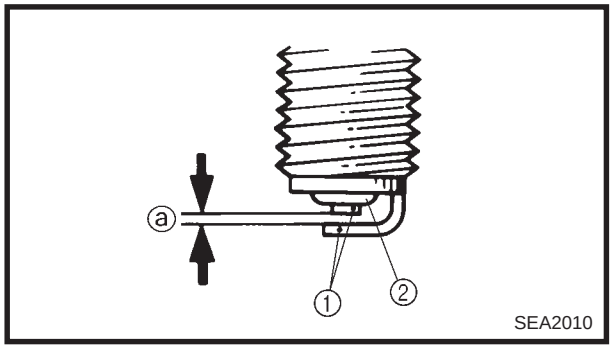

ENGINE

SPARK PLUGS

1. Remove:
   - Spark plug caps
   - Spark plugs
2. Inspect:
   - Electrodes ①
     Damage/wear → Replace the spark plug.
   - Insulator color ②
3. Measure:
   - Spark plug gap ⓐ
     Out of specification → Regap.
     Use a wire thickness gauge.

Spark plug gap:
0.7 ~ 0.8 mm (0.028 ~ 0.031 in)

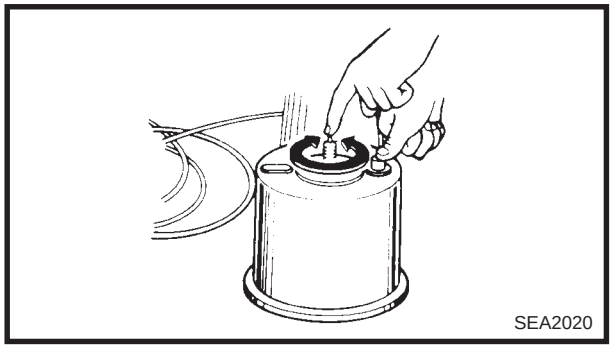

If necessary, clean the spark plugs with a spark plug cleaner.

Standard spark plug:
BR9ES (NGK)

Before installing a spark plug, clean the gasket surface and spark plug surface.

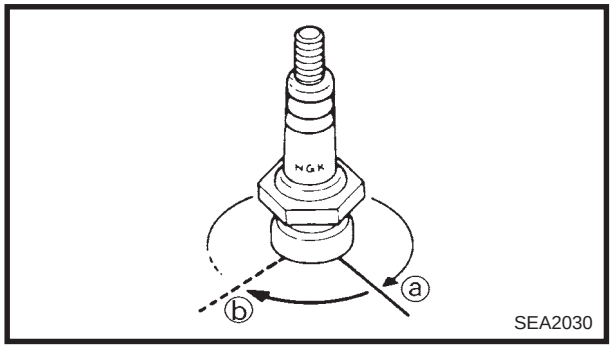

4. Install:
   - Spark plugs

Spark plug:
20 Nm (2.0 m · kg, 14 ft · lb)

NOTE:
Finger-tighten ⓐ the spark plug before torquing ⓑ it to specification.

OIL PUMP

Air bleeding

CAUTION:

The oil pump and oil delivery line must be bled in the following cases:

- **Any portion of the oil system has been disconnected.**
- **The machine has been turned on its side.**
- **The oil tank has been run empty.**
- **As part of the pre-delivery service.**

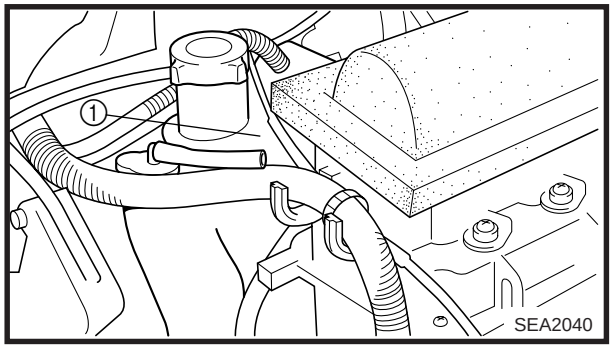

1. Fill:
   - Oil tank ①

Recommended oil:
YAMALUBE 2-cycle oil
Oil tank capacity:
3.0 L (2.6 Imp qt, 3.2 US qt)

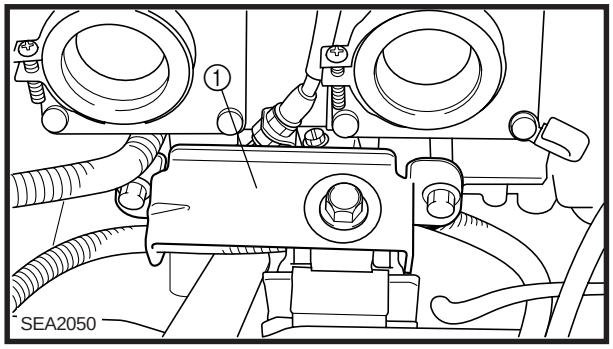

2. Remove:
   - Carburetors
     Refer to “CARBURETORS” in CHAPTER 7.
3. Remove:
   - Rear bracket (right) ①
4. Place a rag under the oil pump assembly to soak up any spilled oil.
5. Disconnect:
   - Oil hose
6. Drain the oil until no more air bubbles appear in the oil hose.
7. Connect:
   - Oil hose
8. Disconnect:
   - Oil delivery hose
9. Feed the “YAMALUBE 2-cycle oil” into the oil delivery hose using an oil can for complete air bleeding.
10. Connect:
    - Oil delivery hose

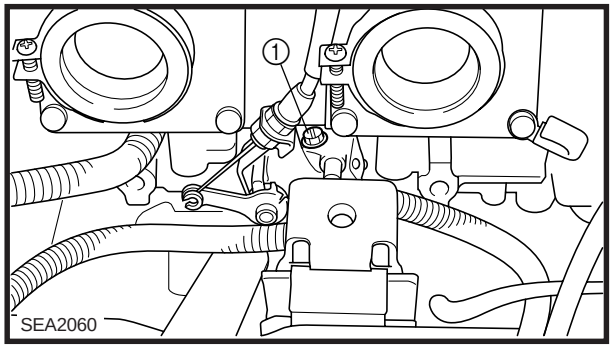

11. Remove:
    - Bleed bolt ①
    - Gasket (bleed bolt)
12. Drain the oil until no more air bubbles appear from the bleed hole.
13. Inspect:
    - Gasket (bleed bolt)
      Damage/wear → Replace.

14. Install:
    - Gasket (bleed bolt)
    - Bleed bolt
15. Install:
    - Rear bracket (right)

M8 mounting bolt (rear):
33 Nm (3.3 m · kg, 24 ft · lb)
M10 mounting bolt (rear):
57 Nm (5.7 m · kg, 41 ft · lb)

16. Install:
    - Carburetors
      Refer to “CARBURETORS” in CHAPTER 7.

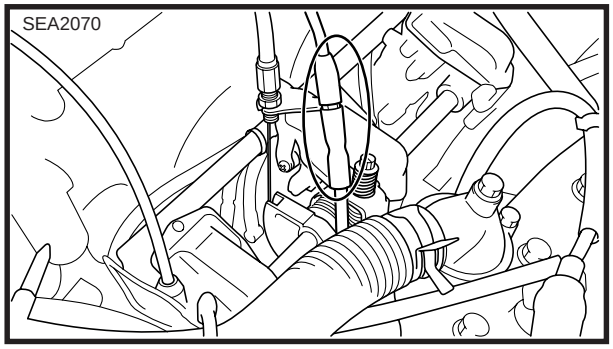

Cable adjustment

NOTE:
Before adjusting the oil pump cable, the throttle cable free play should be adjusted.

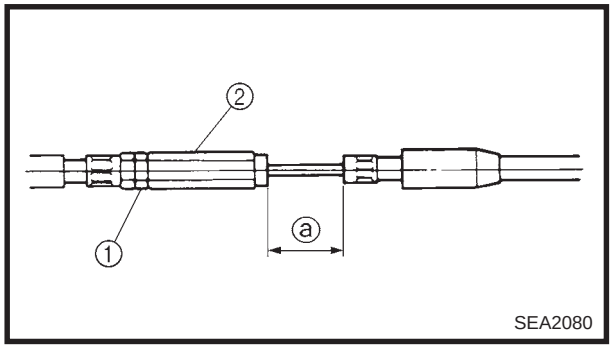

Adjustment steps:
- Slide back the adjuster cover.
- Loosen the locknut ①.
- Turn the adjuster ② in or out until the specified distance ⓐ is obtained.

Distance:
23 ± 1 mm (0.906 ± 0.039 in)

Turning in → Distance ⓐ is increased.
Turning out → Distance ⓐ is decreased.

- Tighten the locknut and push in the adjuster cover.

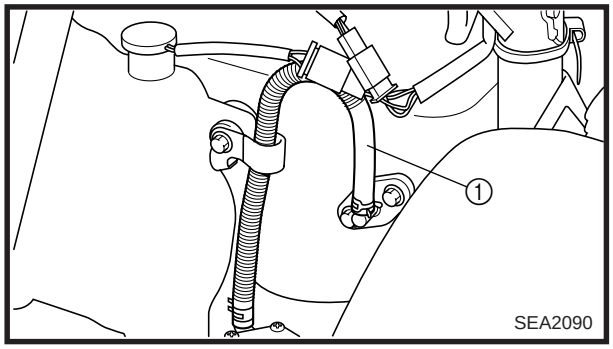

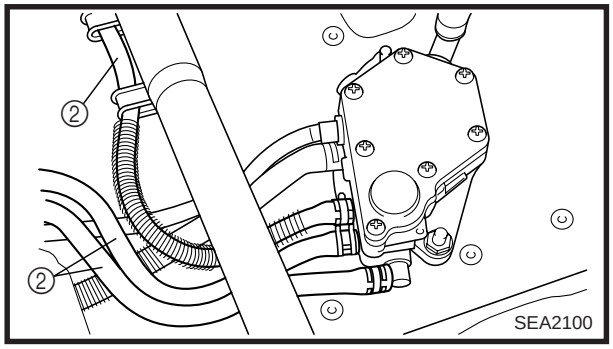

FUEL LINE INSPECTION

1. Remove:
   - Intake silencer
     Refer to “FUEL PUMP” in CHAPTER 7.
2. Inspect:
   - Fuel hose ①
   - Fuel delivery hoses ②
     Cracks/damage → Replace.
3. Install:
   - Intake silencer
     Refer to “FUEL PUMP” in CHAPTER 7.

COOLING SYSTEM

Coolant replacement

NOTE:

The coolant should be changed at least every season.

1. Place the machine on a level surface.

2. Remove:
   - Exhaust pipe
   - Exhaust joint
     Refer to “EXHAUST ASSEMBLY” in CHAPTER 5.

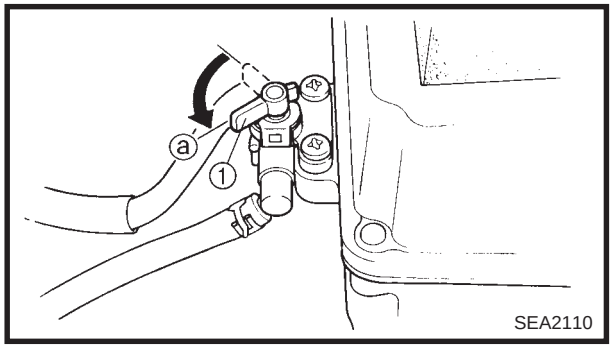

3. Make sure that the carburetor heating lever ① is turned to “ON” ⓐ.

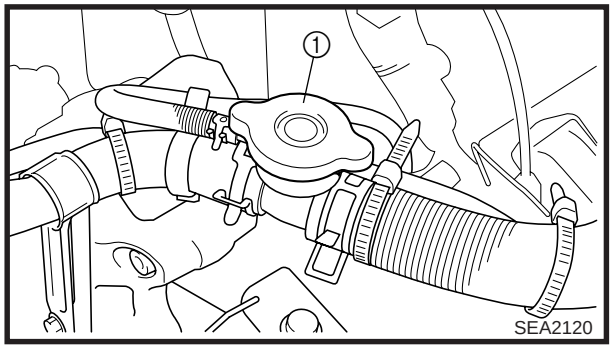

4. Remove:
   - Coolant filler cap ①

⚠ WARNING

Do not remove the coolant filler cap ① when the engine is hot. Pressurized scalding hot fluid and steam may be blown out, which could cause serious injury. When the engine has cooled, place a thick rag or a towel over the coolant filler cap. Slowly turn the cap counterclockwise until it stop. This allows any residual pressure to escape. When the hissing sound has stopped, press down on the cap while turning it counterclockwise to remove it.

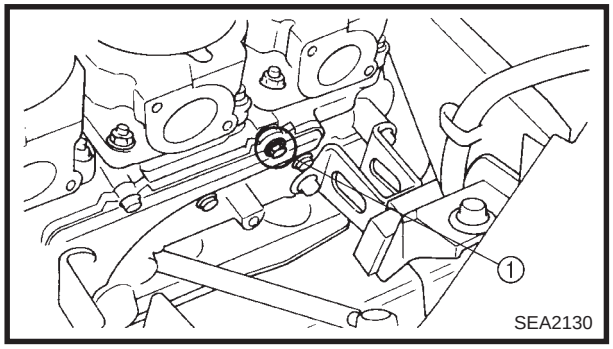

5. Place an open container under the coolant drain bolt ①.
6. Remove:
   - Coolant drain bolt ①
   - Gasket (coolant drain bolt)
7. Drain the coolant.

NOTE:

Lift up the tail of the machine to drain the coolant.

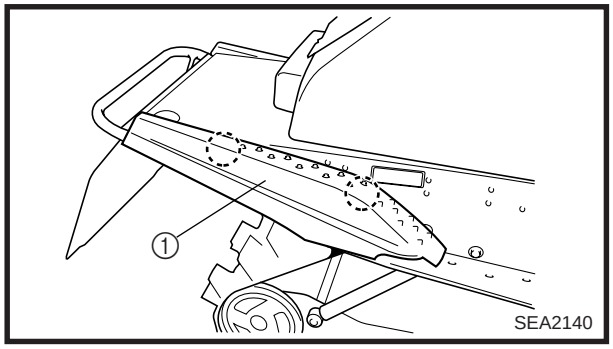

8. Remove:
   - Right side cover ① (MM600)

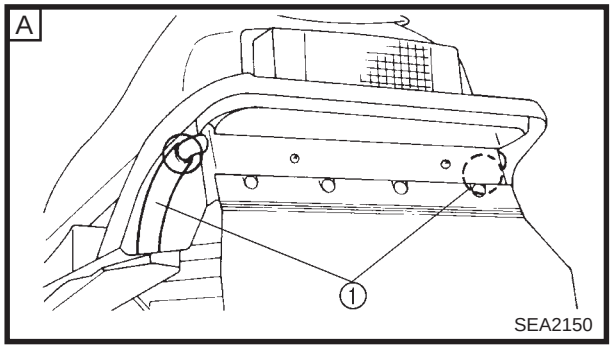

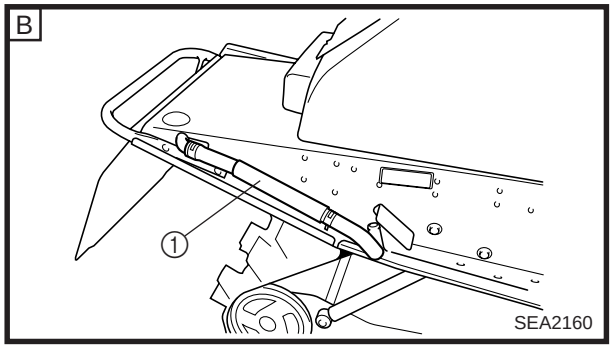

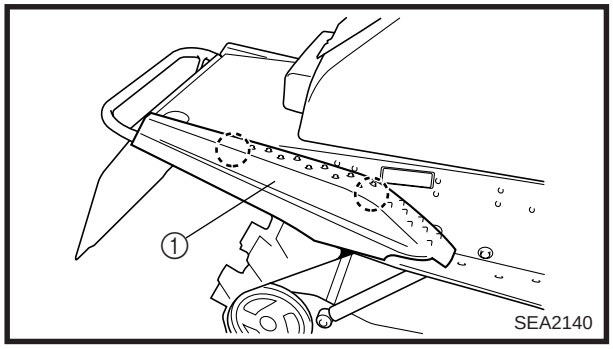

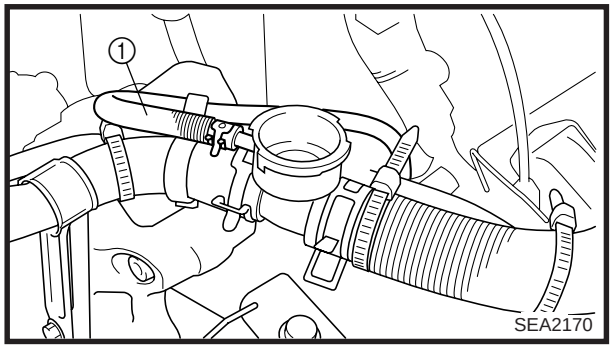

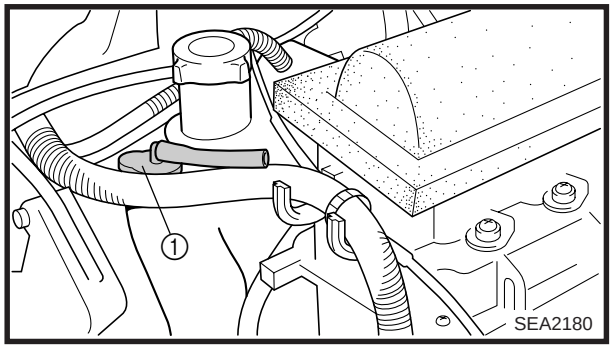

9. Disconnect:
   - Coolant hoses ①
   - Ⓐ VX600ER/SX600/VT600
   - Ⓑ MM600
10. Drain the coolant.

NOTE:

Lift up the front of the machine to drain the coolant completely.

⚠ WARNING

Coolant is poisonous. It is harmful or fatal if swallowed.

- **If coolant is swallowed, induce vomiting immediately and get immediate medical attention.**
- **If coolant splashes in your eyes, thoroughly wash them with water and consult a doctor.**
- **If coolant splashes on your skin or clothes, quickly wash it away with soap and water.**

11. Connect:
    - Coolant hoses
12. Install:
    - Right side cover ① (MM600)

	Bolt (side cover): **3 Nm (0.3 m · kg, 2.2 ft · lb)**

13. Disconnect:
    - Coolant reservoir hose ①

14. Remove:
    - Coolant reservoir cap ①
15. Drain the coolant from the coolant reservoir.
16. Install:
    - Coolant reservoir cap
17. Connect:
    - Coolant reservoir hose

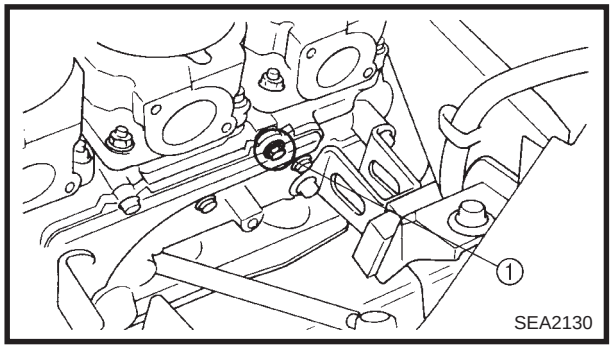

18. Inspect:
    - Gasket (coolant drain bolt)
      Damage → Replace.
19. Install:
    - Gasket
    - Coolant drain bolt ①

Coolant drain bolt:
13 Nm (1.3 m · kg, 9.4 ft · lb)

20. Install:
    - Exhaust joint
    - Exhaust pipe
      Refer to "EXHAUST ASSEMBLY" in CHAPTER 5.

Bolt (exhaust joint):
1st:
18 Nm (1.8 m · kg, 13 ft · lb)
2nd:
27 Nm (2.7 m · kg, 19 ft · lb)

21. Fill:
    - Cooling system

Recommended coolant:
High quality ethylene glycol antifreeze containing corrosion inhibitors
Coolant mixing ratio (coolant:water)
3:2 (60%:40%)
Total amount:
VX600ER/SX600:
3.8 L (3.34 Imp qt, 4.02 US qt)
MM600:
4.0 L (3.52 Imp qt, 4.23 US qt)
VT600:
4.1 L (3.61 Imp qt, 4.33 US qt)
Reservoir tank capacity:
0.28 L (0.25 Imp qt, 0.30 US qt)
From LOW to FULL level:
0.13 L (0.11 Imp qt, 0.14 US qt)

CAUTION:

- **Hard water or salt water is harmful to engine parts. If soft water is not available, use boiled or distilled water.**
- **Do not use water containing impurities or oil.**

22. Bleed the air from the cooling system.
23. Inspect:
    - Cooling system
      Decrease of pressure (leaks) → Repair as required.

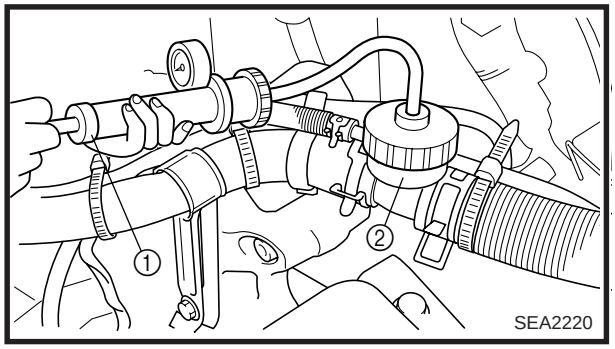

Inspection steps:

- Attach the cooling system tester ① to the coolant filler ②.

	**Cooling system tester:** **90890-01325, YU-24460-01**

- Apply 100 kPa (1.0 kg/cm^2, 14 psi).
- Measure the pressure with the gauge.

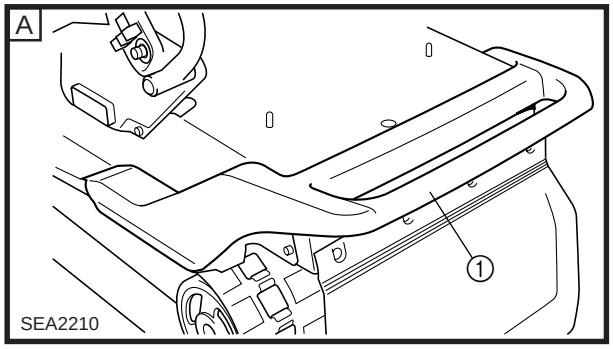

Air bleeding

1. Remove:
    - Seat (VX600ER/SX600/VT600)
    - Rear bumper cover ① (VT600)
    - Bleed bolt cap ① (MM600)

A VT600
B MM600

2 .Bleed air from the cooling system.

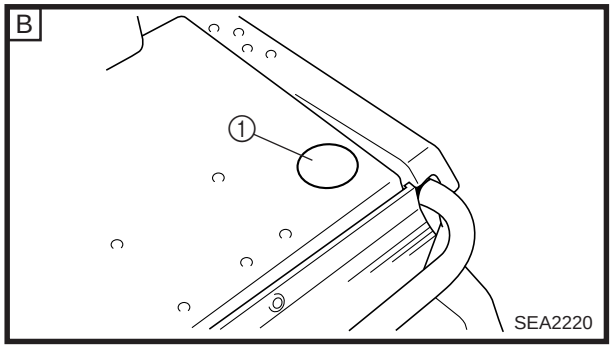

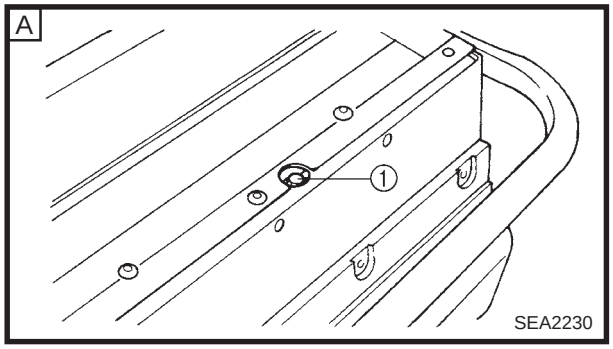

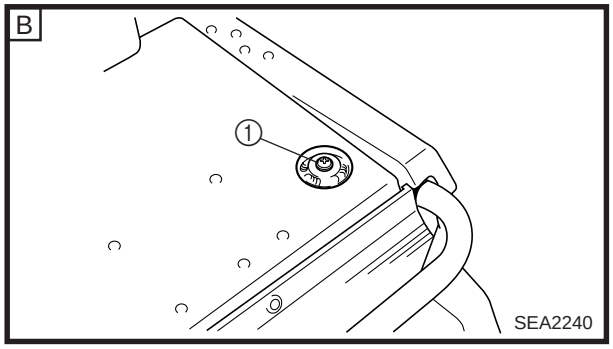

Air bleeding steps:

- Lift up the tail of the machine.
- Remove the bleed bolt ① on the heat exchanger.
- While slowly adding coolant to the coolant filler, drain the coolant until no more air bubbles appear.
- Tighten the bleed bolt ①.

Bleed bolt:
VX600ER/SX600/VT600:
13 Nm (1.3 m · kg, 9.4 ft · lb)
MM600:
4 Nm (0.4 m · kg, 2.9 ft · lb)

A VX600ER/SX600/VT600
B MM600

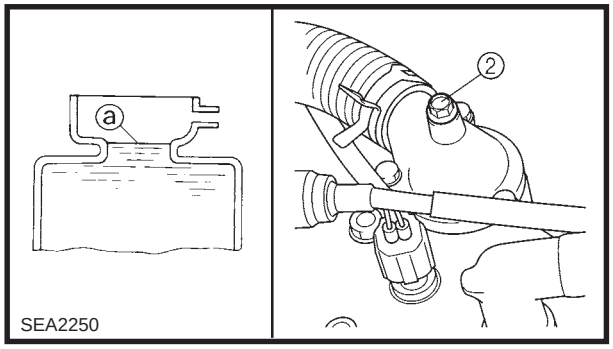

- Add coolant to the coolant cold level ⓐ.
- Loosen the bleed bolt ② on the thermostatic cover.
- Drain the coolant until no more air bubbles appear.
- Tighten the bleed bolt ②.

Bleed bolt:
7 Nm (0.7 m · kg, 5.1 ft · lb)

- Install the coolant filler cap.
  Apply and lock the parking brake. Start the engine and run it at approximately 2,500 ~ 3,000 r/min until the coolant circulates (approximately 3 ~ 5 minutes). The rear heat exchanger will be warm to the touch.

⚠ WARNING

To avoid severe injury or death:

- **Make sure the machine is securely supported with a suitable stand.**
- **Do not exceed 3,000 r/min. Drive line damage and excessive V-belt wear could occur, or the machine could unexpectedly move forward if the clutch engages.**
- **Operate the engine only in a well-ventilated area.**

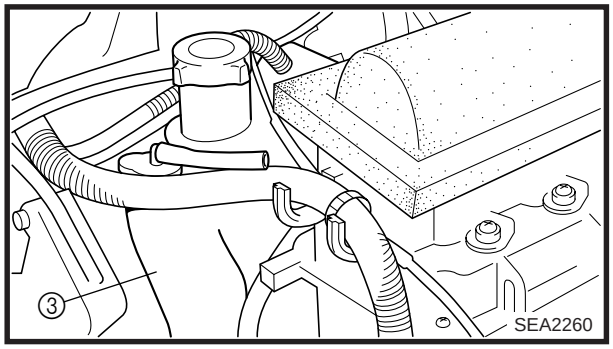

- Remove the coolant filler cap and bleed the cooling system again, as described above.
  No air bubbles → OK.
- Add coolant to the specified level.
- Pour coolant into the coolant reservoir ③ until the coolant level reaches the "FULL" level mark.

3. Install:
   - Bleed bolt cap (MM600)
   - Rear bumper cover (VT600)
   - Seat (VX600ER/SX600/VT600)

CARBURETOR SYNCHRONIZATION

1. Remove:
   - Carburetors
     Refer to "CARBURETORS" in CHAPTER 7.
2. Adjust:
   - Carburetor synchronization

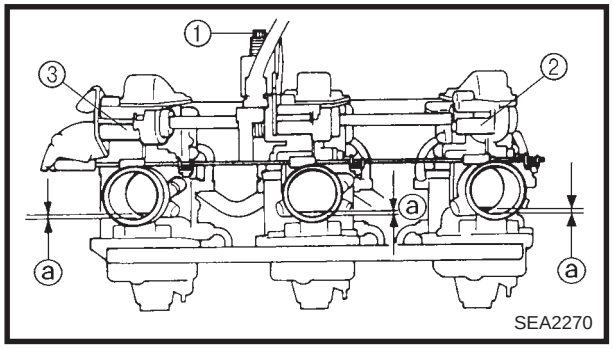

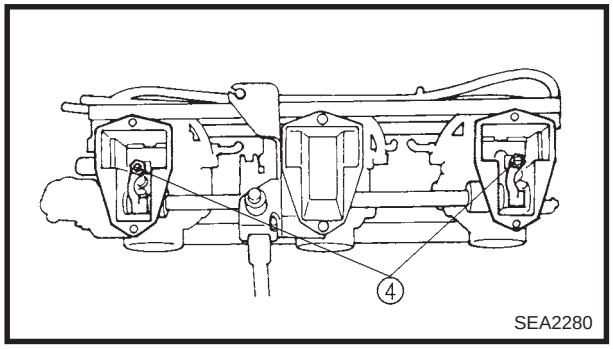

Adjustment steps:

- Turn the throttle stop screw ① of carburetor #2 until the specified throttle valve height ⓐ is obtained.

	Throttle valve height: **1.2 mm (0.047 in)**

- Adjust the throttle valve height ⓐ on carburetor #1 ② and #3 ③ with the adjusting screws ④.
- Move the throttle lever 2 ~ 3 times.
- Make sure that all of the carburetor throttle valves are at the same height.

3. Install:
   - Carburetors
     Refer to "CARBURETORS" in CHAPTER 7.

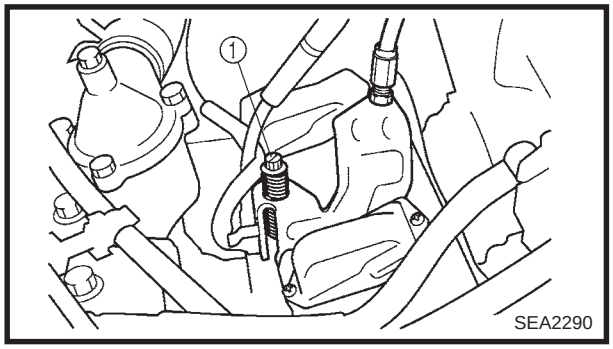

ENGINE IDLE SPEED ADJUSTMENT

1. Adjust:
   - Engine idle speed

Adjustment steps:
- Start the engine and let it warm up.
- Turn the throttle stop screw ① in or out until the specified engine idle speed is obtained.

Turning in → Idle speed is increased.
Turning out → Idle speed is decreased.

Engine idle speed:
1,600 ± 100 r/min

NOTE:
After adjusting the engine idle speed, the throttle cable free play should be adjusted.

THROTTLE CABLE FREE PLAY ADJUSTMENT

NOTE:
- Before adjusting the throttle cable free play, the engine idle speed should be adjusted.
- Adjust the throttle cable free play while the cable is in the cable guide.

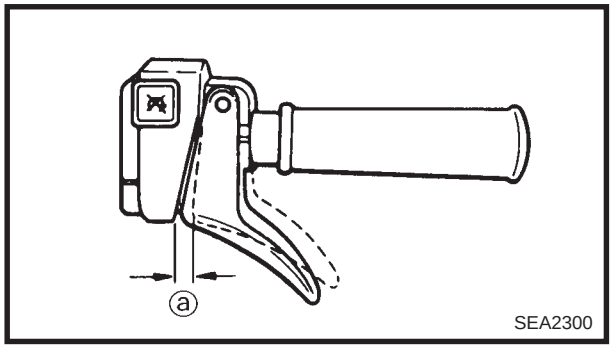

1. Measure:
   - Throttle cable free play ⓐ
     Out of specification → Adjust.

Throttle cable free play:
1.0 ~ 2.0 mm (0.04 ~ 0.08 in)

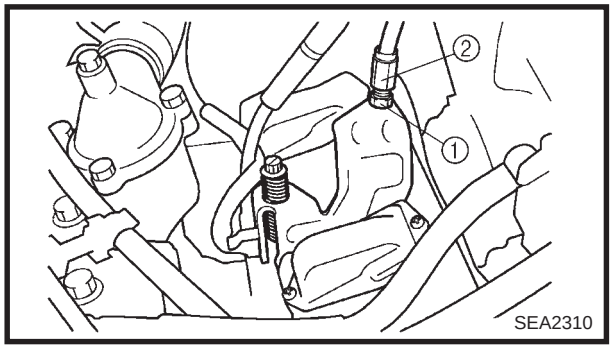

2. Adjust:
   - Throttle cable free play

Adjustment steps:
- Loosen the locknut ①.
- Turn the adjusting nut ② in or out until the specified free play is obtained.

Turning in → Free play is increased.
Turning out → Free play is decreased.

- Tighten the locknut.

NOTE:
After adjusting the free play, turn the handlebar to right and left, and make sure that the engine idling does not run faster.

THROTTLE OVERRIDE SYSTEM (T.O.R.S.) CHECK

⚠ WARNING

When checking T.O.R.S.:
- **Be sure the parking brake is applied.**
- **Be sure the throttle lever moves smoothly.**
- **Do not run the engine up to the clutch engagement speed. Otherwise, the machine could start moving forward unexpectedly, which could cause an accident.**

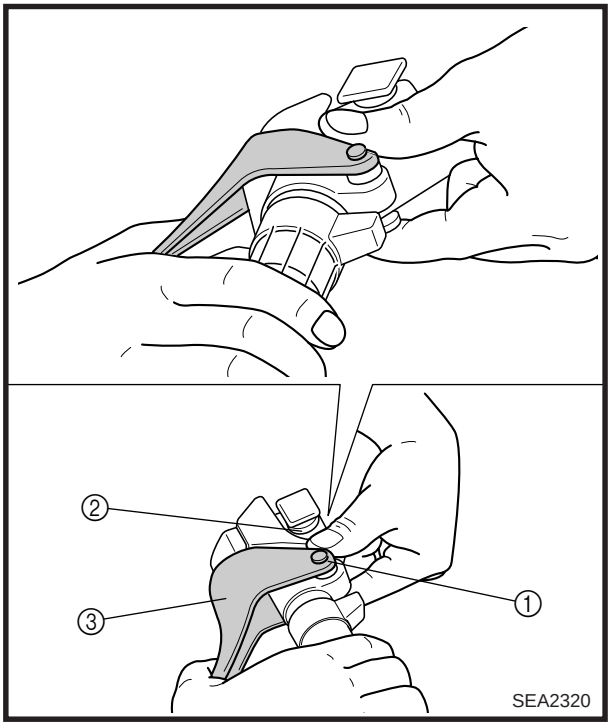

1. Start the engine.
2. Hold the pivot point of the throttle lever away from the throttle switch by putting your thumb (above) and forefinger (below) between the throttle lever pivot ① and stop switch housing ②.
   While holding as described above, press the throttle lever ③ gradually.
   The T.O.R.S. will operate and the engine should run between 2,800 and 3,000 r/min.

⚠ WARNING

If the engine does not run between 2,800 and 3,000 r/min, stop the engine by turning the main switch to the "OFF" position and check the electrical system.

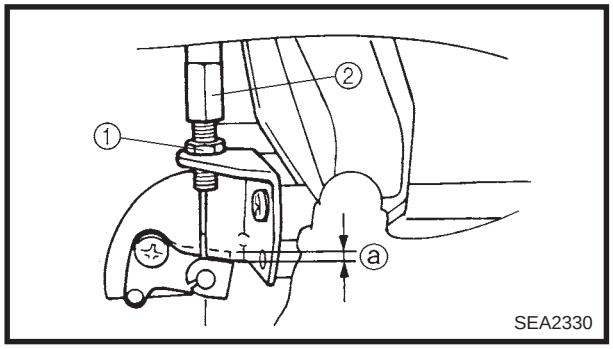

STARTER (CHOKE) CABLE FREE PLAY ADJUSTMENT

1. Measure:
   - Starter cable free play ⓐ
     Out of specification → Adjust.

Starter cable free play:
0.5 ~ 1.5 mm (0.02 ~ 0.06 in)

2. Adjust:
   - Starter cable free play

Adjustment steps:
- Loosen the locknut ①.
- Turn the adjusting nut ② in or out until the specified free play is obtained.

Turning in → Free play is increased.
Turning out → Free play is decreased.

- Tighten the locknut.

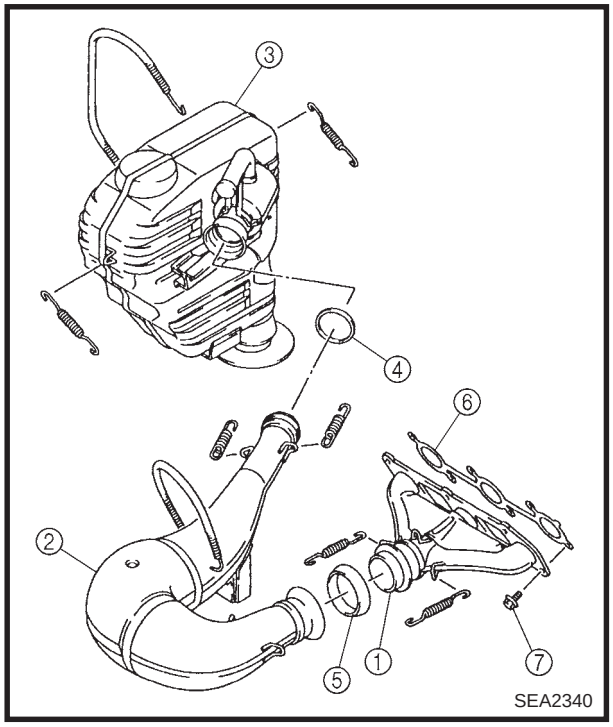

EXHAUST SYSTEM INSPECTION

1. Open the shroud.
2. Remove:
   - Springs
     Refer to "EXHAUST ASSEMBLY" in CHAPTER 5.
3. Inspect:
   - Exhaust joint ①
   - Exhaust pipe ②
   - Exhaust silencer ③
     Cracks/damage → Replace.
   - Gasket 1 ④
   - Gasket 2 ⑤
   - Gasket 3 ⑥
     Exhaust gas leaks → Replace.
4. Check:
   - Tightening torque ⑦

Bolt (exhaust joint):
1st:
18 Nm (1.8 m · kg, 13 ft · lb)
2nd:
27 Nm (2.7 m · kg, 19 ft · lb)

5. Install:
   - Springs
     Refer to "EXHAUST ASSEMBLY" in CHAPTER 5.

POWER TRAIN

SHEAVE DISTANCE AND OFFSET ADJUSTMENT

1. Open the shroud.
2. Remove:
   - Drive V-belt guard
   - Drive V-belt

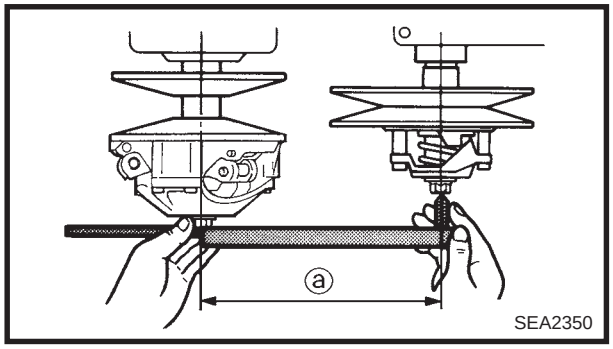

3. Measure:
   - Sheave distance ⓐ
     Use the distance gauge.
     Out of specification → Adjust.

Sheave distance:
267 ~ 270 mm (10.52 ~ 10.62 in)

Distance gauge:
90890-01702, YS-91047-3

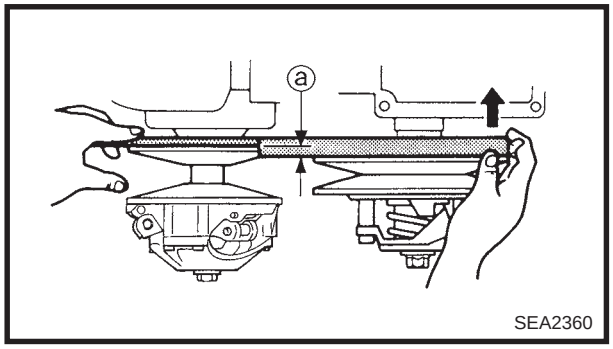

4. Measure:
   - Sheave offset ⓐ
     Use the sheave gauge.
     Out of specification → Adjust.

Sheave offset:
VX600ER/VT600:
18.5 ~ 21.5 mm (0.73 ~ 0.85 in)
SX600/MM600:
13.5 ~ 16.5 mm (0.53 ~ 0.64 in)

Sheave gauge:
YS-42421-1 (15 mm offset)
YS-42421-2 (20 mm offset)

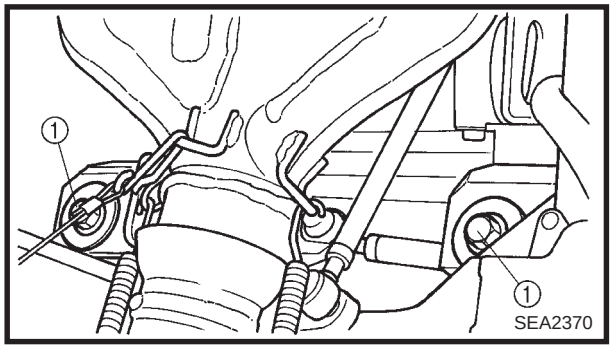

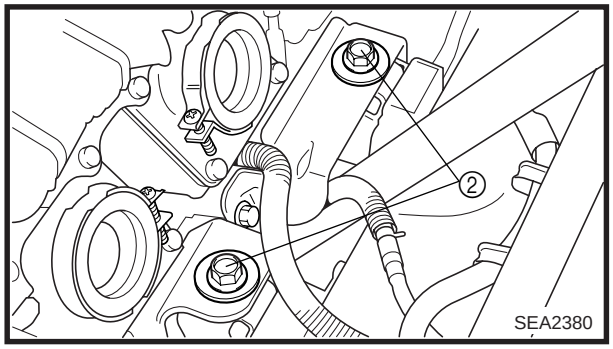

5. Adjust:
   - Sheave distance

Adjustment steps:
- Loosen the mounting bolts (front) ① and mounting bolts (rear) ②.
- Adjust the position of the engine so that the sheave distance is within the specification.
- Tighten the mounting bolts (front) ① and mounting bolts (rear) ②.

Mounting bolt (front):
90 Nm (9.0 m · kg, 65 ft · lb)
Mounting bolt (rear):
57 Nm (5.7 m · kg, 41 ft · lb)

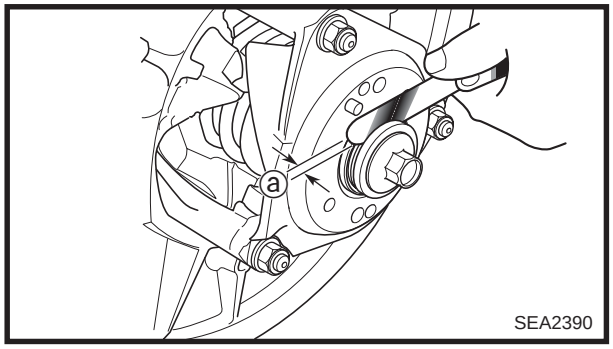

6. Measure:
   - Secondary sheave free play (clearance) ⓐ
     Use a thickness gauge.
     Out of specification → Adjust.

Secondary sheave free play (clearance):
1.0 ~ 2.0 mm (0.04 ~ 0.08 in)

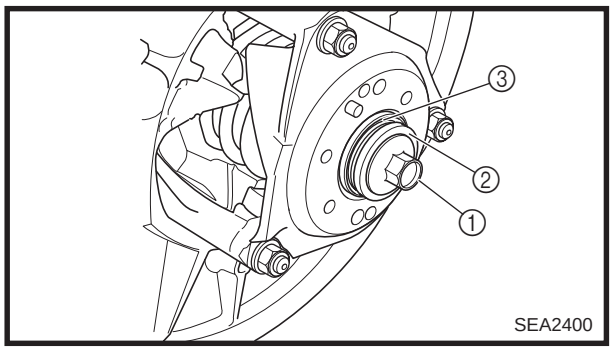

7. Adjust:
   - Secondary sheave free play (clearance)

Adjustment steps:
- Apply the brake to lock the secondary sheave.
- Remove the bolt ① and washer ②.
- Adjust the secondary sheave free play (clearance) by adding or removing a shim(s) ③.

Shim size:

Part number	Thickness
90201-222F0	0.5 mm (0.02 in)
90201-225A4	1.0 mm (0.04 in)

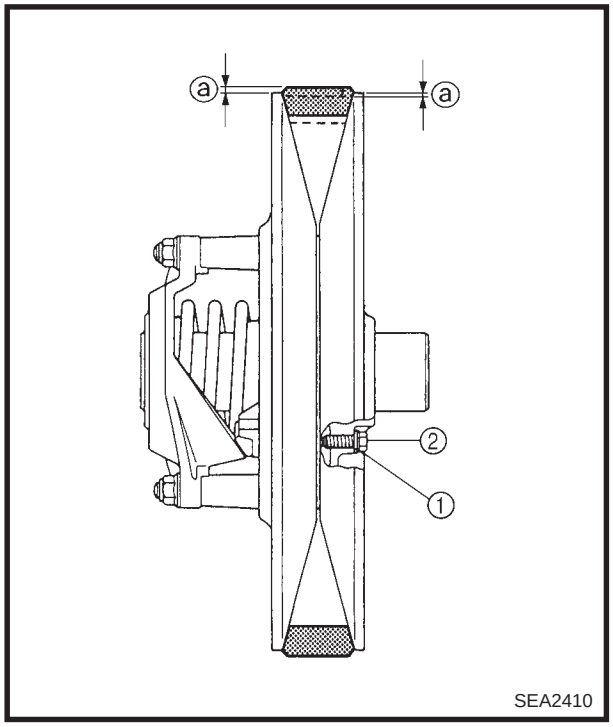

DRIVE V-BELT

⚠ WARNING

When installing the new V-belt, make sure that it is positioned from 1.5 mm (0.06 in) above the edge of the secondary sheave to –0.5 mm (–0.02 in) below the edge ⓐ.
If the V-belt is not positioned correctly, the clutch engagement speed will be changed. The machine may move unexpectedly when the engine is started.
Adjust the V-belt position by removing or adding a spacer ① on each adjusting bolt ②.

CAUTION:

As the V-belt wears, adjustment may be necessary. To ensure proper clutch performance, the V-belt position should be adjusted by adding a spacer on each adjusting bolt when the V-belt position reaches 1.5 mm (0.06 in) below the edge.

New belt width:
34.5 mm (1.36 in)
Belt wear limit width:
32.5 mm (1.28 in)

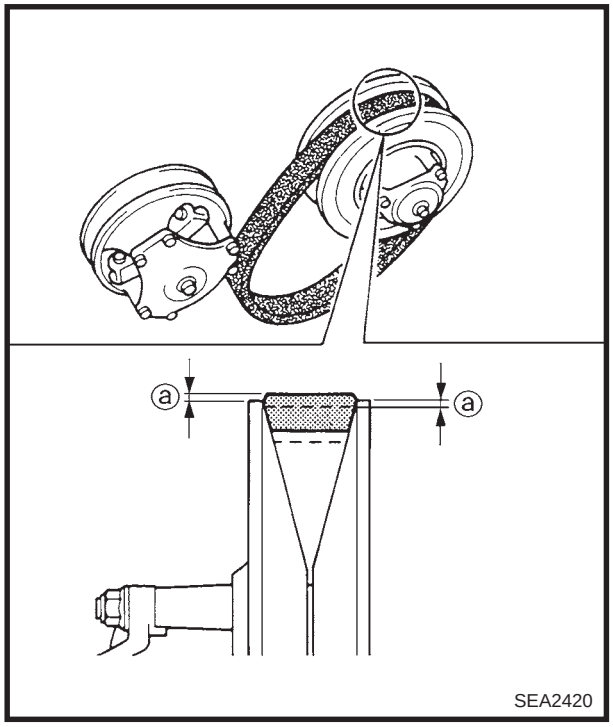

1. Measure:
   - V-belt position ⓐ

NOTE:

Install the new V-belt onto the secondary sheave only. Do not force the V-belt between the sheaves; the sliding and fixed sheaves must touch each other.

V-belt position:
–0.5 ~ 1.5 mm (–0.02 ~ 0.06 in)

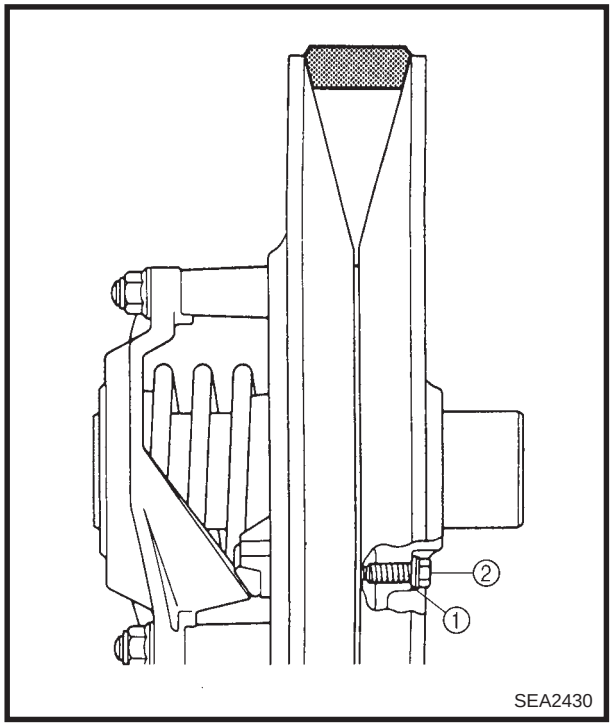

2. Adjust the position of the V-belt by removing or adding a spacer ① on each adjusting bolt ②.

V-belt position	Adjustment
More than 1.5 mm (0.06 in) above the edge	**Remove a spacer**
From 1.5 mm (0.06 in) above the edge to –0.5 mm (–0.02 in) below the edge	**Not necessary (It is correct.)**
More than –0.5 mm (–0.02 in) below the edge	**Add spacer**

3. Tighten:
   - Adjusting bolt ②

Adjusting bolt:
10 Nm (1.0 m · kg, 7.2 ft · lb)

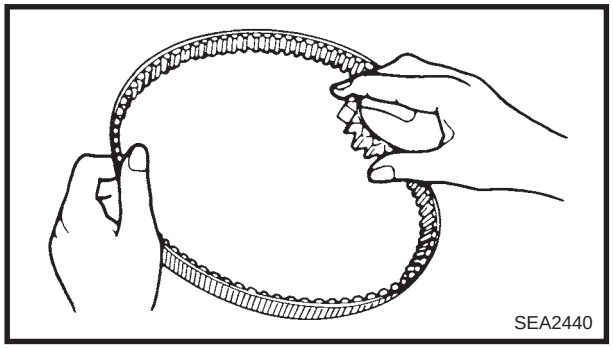

4. Inspect:
   - Drive V-belt
     Cracks/damage/wear → Replace.
     Oil or grease on the V-belt → Check the primary and secondary sheaves.

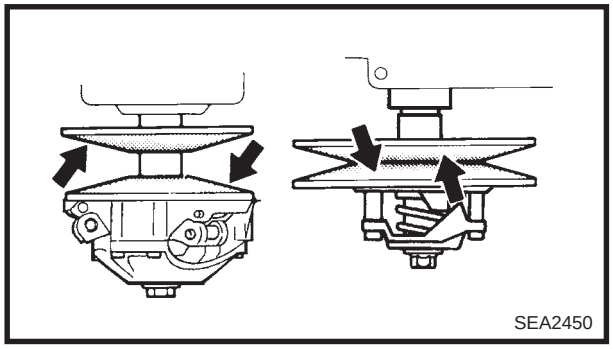

5. Inspect:
   - Primary sheave
   - Secondary sheave
     Oil or grease on the primary and secondary sheaves → Use a rag soaked in lacquer thinner or solvent to remove the oil or grease. Check the primary and secondary sheaves.

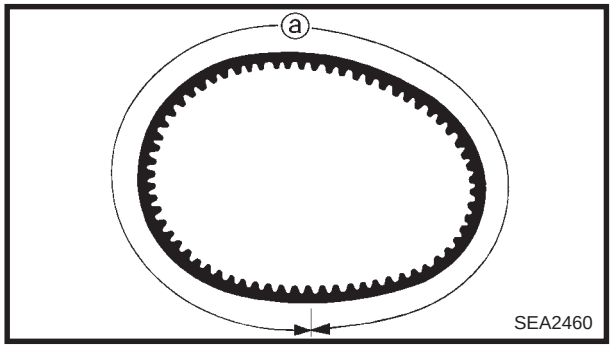

6. Measure:
   - V-belt circumference ⓐ
     Out of specification → Replace.

V-belt circumference:
1,129 ~ 1,137 mm (44.4 ~ 44.7 in)

ENGAGEMENT SPEED CHECK

1. Place the machine on a level surface of hard-packed snow.
2. Check:
   - Clutch engagement speed

Checking steps:

- Start the engine, and open the throttle lever gradually.
- Check the engine speed when the machine starts moving forward.
  Out of specification → Adjust the primary sheave.

Engagement speed:
VX600ER/VT600 for U.S.A./Canada:
4,000 ± 200 r/min
(3,800 ~ 4,200 r/min)
SX600:
4,200 ± 200 r/min
(4,000 ~ 4,400 r/min)
MM600:
4,600 ± 200 r/min
(4,400 ~ 4,800 r/min)
VT600 for Europe:
3,900 ± 200 r/min
(3,700 ~ 4,100 r/min)

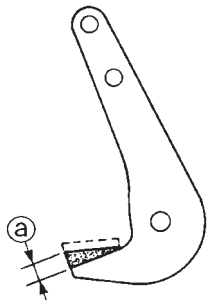

PARKING BRAKE PAD INSPECTION

1. Measure:
   - Parking brake pad thickness ⓐ
     Out of specification → Replace as a set.

Wear limit:
1.0 mm (0.04 in)

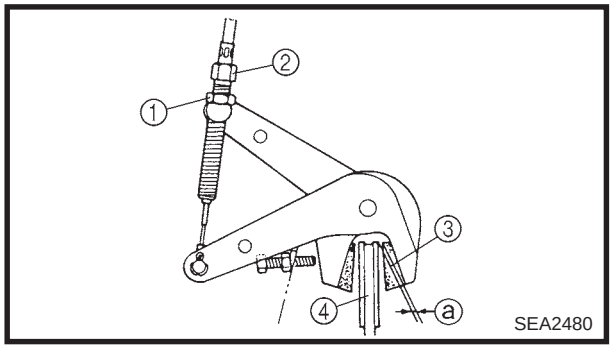

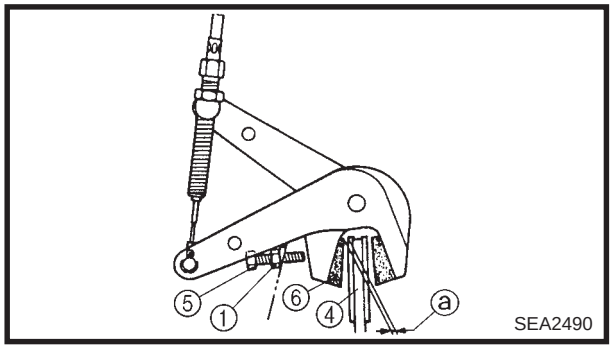

PARKING BRAKE ADJUSTMENT

1. Measure:
   - Clearance ⓐ
     Out of specification → Adjust.

Clearance:
1.2 ~ 1.3 mm (0.047 ~ 0.051 in)

2. Adjust:
   - Clearance ⓐ

Adjustment steps:
- Loosen the locknuts ①.
- Turn the cable adjuster ② in or out to until the specified clearance between the brake pad ③ and disc ④ is obtained.
- Turn the brake pad adjusting bolt ⑤ in or out until the specified clearance between the brake pad ⑥ and disc ④ is obtained.
- Tighten the locknuts.

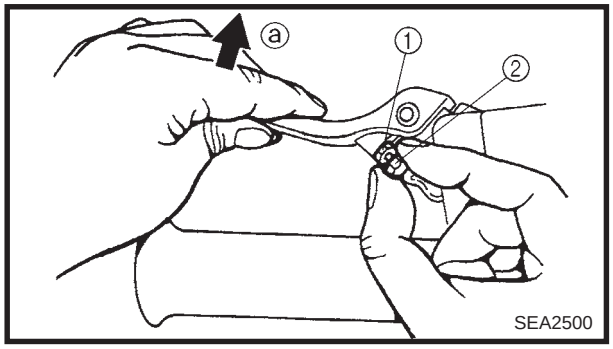

BRAKE LEVER ADJUSTMENT (VX600ER/SX600/VT600)

1. Adjust:
   - Brake lever position
     (distance from the grip to the brake lever)

Adjustment steps:
- Loosen the locknut ①.
- While lightly pushing the brake lever in direction ⓐ, turn the adjusting bolt ② by fingers to set the brake lever to the desired position.
- Tighten the locknut securely after adjusting.

Locknut:
6 Nm (0.6 m · kg, 4.3 ft · lb)

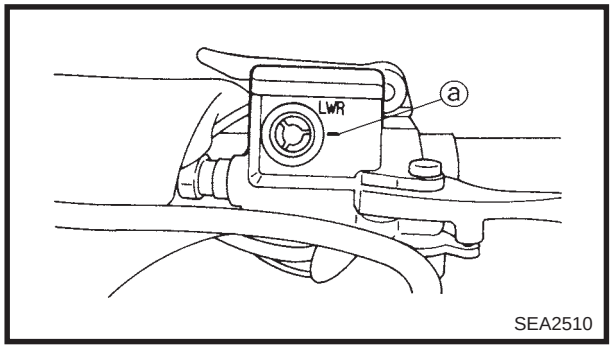

BRAKE FLUID LEVEL INSPECTION

1. Place the machine on a level surface.
2. Check:
   - Fluid level
     Fluid level is under the “LOWER” level line ⓐ
     → Fill to the proper level.

Recommended brake fluid:
DOT 4

NOTE:

For a correct reading of the brake fluid level, make sure that the top of the handlebar brake master cylinder reservoir is horizontal.

CAUTION:

Brake fluid may corrode painted surfaces or plastic parts. Always clean up spilled fluid immediately.

⚠ WARNING

- **Use only the designated brake fluid. Other fluids may deteriorate the rubber seals, causing leakage and poor brake performance.**
- **Refill with the same type of fluid. Mixing fluids may result in a harmful chemical reaction leading to poor brake performance.**
- **When refilling, be careful that water does not enter the brake master cylinder reservoir. Water will significantly lower the boiling point of the fluid and may cause vapor lock.**

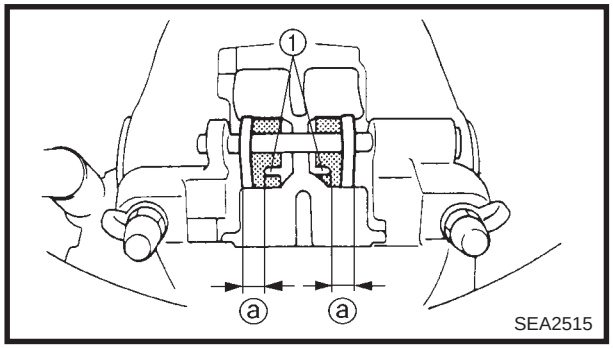

BRAKE PAD INSPECTION

1. Apply the brake lever.
2. Inspect:
   - Brake pad wear limit ⓐ
     Wear indicator ① nearly contacts the brake disc → Replace as a set.

Wear limit:
4.7 mm (0.19 in)

BRAKE HOSE INSPECTION

1. Inspect:
   - Brake hose
     Cracks/damage/wear → Replace.
2. Check:
   - Fluid leakage
     Apply the brake lever several times.
     Fluid leakage → Replace the defective parts.

AIR BLEEDING (HYDRAULIC BRAKE SYSTEM)

⚠ WARNING

Bleed the brake system in the following cases:
- **The system has been disassembled.**
- **A brake hose is loosened or removed.**
- **The brake fluid has been very low.**
- **Brake operation is faulty.**

If the brake system is not properly bled a loss of braking performance may occur.

1. Bleed:
   - Brake system

Air bleeding steps:
- Fill the brake master cylinder reservoir with the proper brake fluid.
- Install the diaphragm. Be careful not to spill any fluid or allow the brake master cylinder reservoir to overflow.
- Connect clear plastic hoses ① tightly to the brake caliper bleed screws ②.
- Place the other ends of the hoses in a container.

a. Slowly apply the brake lever several times.
b. Pull the lever in, then hold the lever in position.
c. Loosen the bleed screws and allow the brake lever to travel towards its limit.

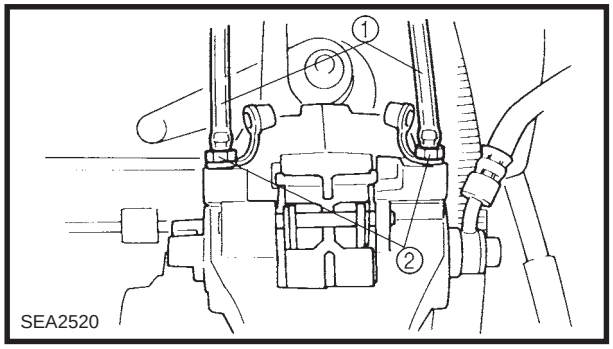

d. Tighten the bleed screws when the brake lever limit has been reached, then release the lever.
- Repeat steps (a) to (d) until all of the air bubbles have disappeared from the fluid.
- Tighten the bleed screws.

Bleed screw:
6 Nm (0.6 m · kg, 4.3 ft · lb)

NOTE:

If bleeding is difficult, it may be necessary to let the brake fluid settle for a few hours.
Repeat the bleeding procedure when the tiny bubbles in the system have disappeared.

- Add brake fluid to the proper level.
  Refer to “BRAKE FLUID LEVEL INSPECTION”.

WARNING

After bleeding the brake system, check the brake operation.

DRIVE CHAIN

Oil level inspection

WARNING

The engine and muffler will be very hot after the engine has run. Avoid touching a hot engine and muffler while they are still hot with any part of your body or clothing during inspection or repair.

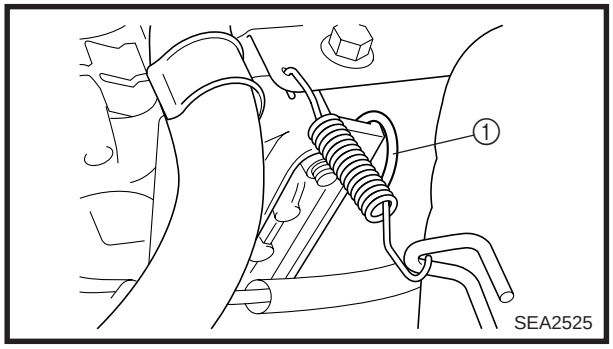

1. Place the machine on a level surface.
2. Check:
   - Oil level

Checking steps:

- Remove the dipstick ① and wipe it off with a clean rag.
  Reinsert the dipstick.

CAUTION:

There is a magnet attached to the end of the dipstick. It is used to remove any metal particles that may accumulate in the drive chain housing. Be sure to:

- **Pull the dipstick out slowly and gently so the metal particles do not fall off the magnet back into the drive chain housing.**
- **Wipe off the magnet before reinserting the dipstick into the drive chain housing.**

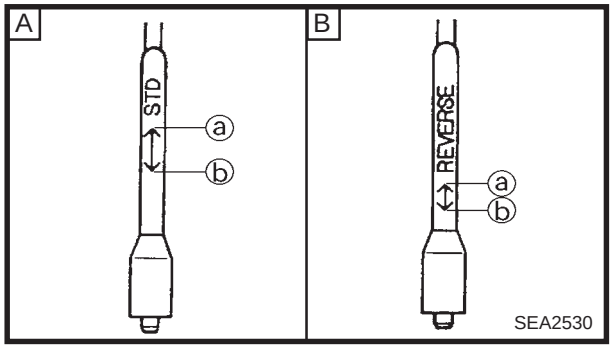

- Remove the dipstick and check that the oil is between the upper ⓐ and lower ⓑ levels. If not, add oil to the upper level.

A For models without reverse transmissions (SX600/MM600)

B For models with reverse transmissions (VX600ER/VT600)

Recommended oil:
Gear oil API "GL-3"
SAE #75 or #80

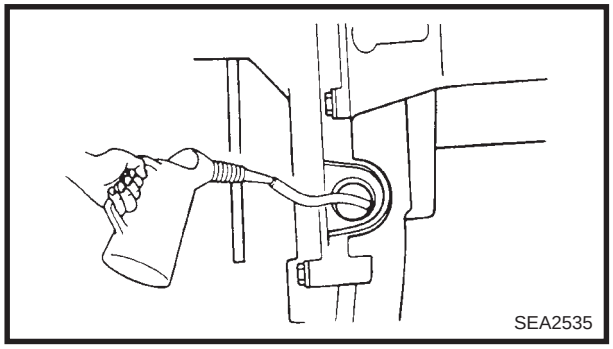

CAUTION:

Make sure that no foreign material enters the gear case.

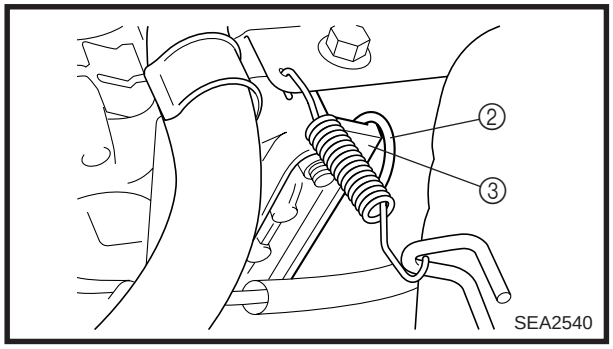

- Reinsert the dipstick and fit the loop ② of the dipstick handle onto the projection ③ of the gear case.

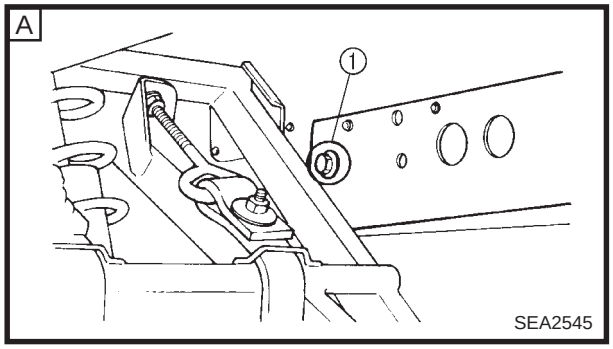

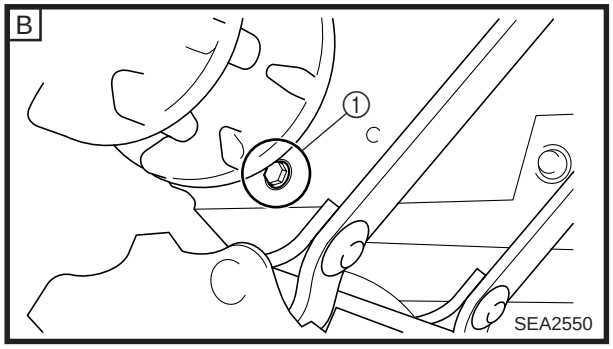

Oil replacement

Oil replacement steps:

- Place the oil pan under the drain hole.
- Remove the oil drain bolt ① and drain the oil.

CAUTION:

Be sure to remove any oil from the heat protector.

- Install the oil drain bolt ①.

Oil drain bolt:
16 Nm (1.6 m · kg, 11 ft · lb)

Recommended oil:
Gear oil API "GL-3" SAE #75 or #80
Oil capacity:
0.25 L (8.8 Imp oz, 8.5 US oz)

A VX600ER/SX600/VT600
B MM600

Chain slack adjustment

1. Remove:
   - Battery (VX600ER/VT600)
   - Battery bracket (VX600ER/VT600)

WARNING

When removing the battery, disconnect the negative lead first.

2. Adjust:
   - Drive chain slack

Adjustment steps:

- Loosen the locknut ①.
- Turn the adjusting bolt ② in until it is finger tight.
- Tighten the locknut ①.

Locknut (Chain tensioner):
24 Nm (2.4 m · kg, 17 ft · lb)

3. Install:
   - Battery bracket (VX600ER/VT600)
   - Battery (VX600ER/VT600)

CAUTION:

- **Connect the positive lead to the battery terminal first.**
- **Make sure the battery leads are connected properly. Reversing the leads can seriously damage the electrical system.**
- **Make sure that the battery breather hose is properly connected and is not obstructed.**

TRACK TENSION ADJUSTMENT

⚠ WARNING

A broken track or track fittings, and debris thrown by the track could be dangerous to an operator or by standers. Observe the following precautions.

- **Do not allow anyone to stand behind the machine when the engine is running.**
- **When the rear of the machine is raised to allow the track to spin, a suitable stand must be used to support the rear of the machine. Never allow anyone to hold the rear of the machine off the ground to allow the track to spin. Never allow anyone near a rotating track.**
- **Inspect the condition of the track frequently. Replace the track if it is damaged to a level where the fabric reinforcement material is visible.**
- **Never install studs (cleats) closer than 76 mm (3 in) to the edge of the track.**

1. Lift the rear of the machine onto a suitable stand to raise the track off the ground.
2. Measure:
   - Track deflection ⓐ
     Using a spring scale ①, pull down on the center of the track with 10 kg (22 lb) of force.
     Out of specification → Adjust.

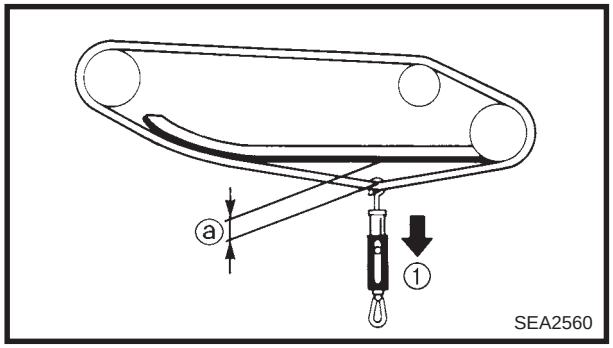

Track deflection:
VX600ER/SX600/VT600:
25 ~ 30 mm (0.98 ~ 1.18 in)
MM600:
20 ~ 25 mm (0.79 ~ 0.98 in)

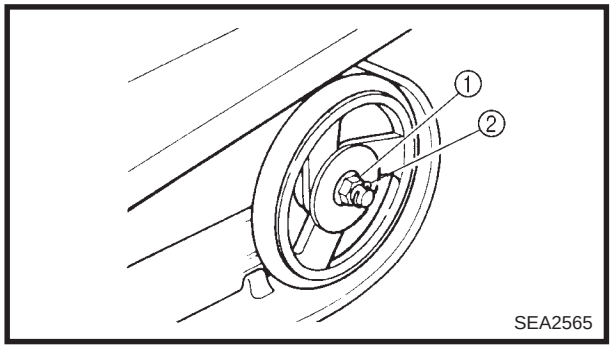

3. Adjust:
   - Track deflection

Adjustment steps:

- Place the machine onto a suitable stand to raise the track off of the ground.
- Loosen the rear axle nut ①.

NOTE:

It is not necessary to remove the cotter pin ②.

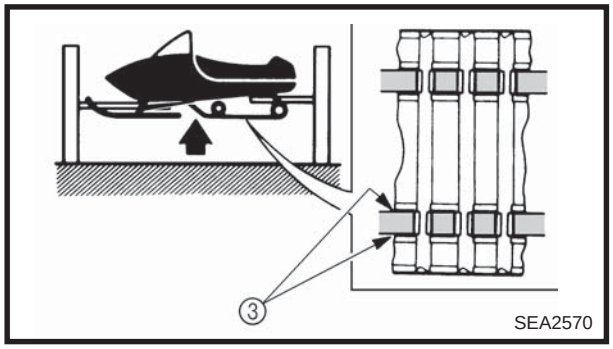

a. Start the engine and rotate the track once or twice. Stop the engine.
b. Check the track alignment with the slide runner ③. If the alignment is incorrect, turn the left and right adjusters to adjust.

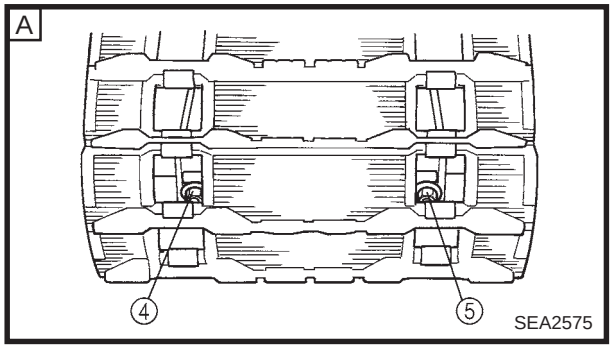

Track alignment	⑥ Shifted to right	⑦ Shifted to left
④ Left adjuster	Turn out	Turn in
⑤ Right adjuster	Turn in	Turn out

⑧ Slide runner ⑨ Track
⑩ Track metal ⑪ Gap ⑫ Forward
A VX600ER/SX600/VT600
B MM600

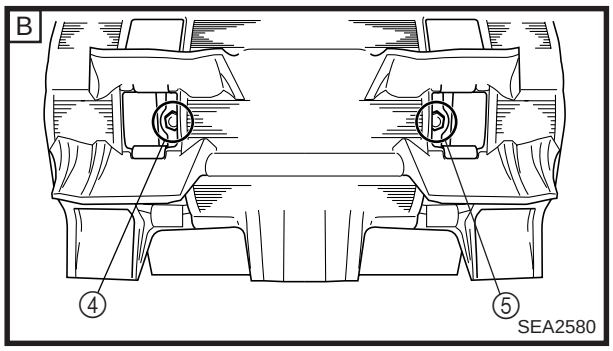

c. Adjust the track deflection until the specified amount is obtained.

Track deflection	More than specified	Less than specified
④ Left adjuster	Turn in	Turn out
⑤ Right adjuster	Turn in	Turn out

CAUTION:

The adjusters should be turned an equal amount.

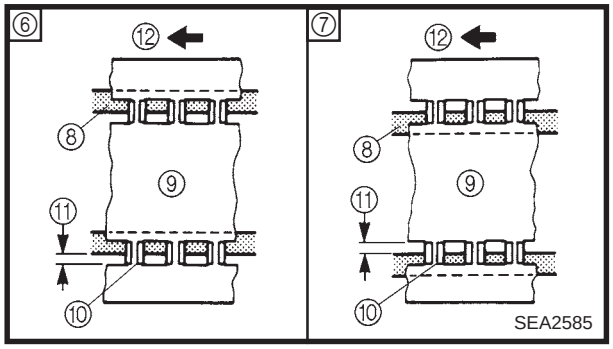

- Recheck the alignment and deflection. If necessary, repeat steps (a) to (c) until the specified amount is obtained.
- Tighten the rear axle nut.

	Nut (rear axle): **75 Nm (7.5 m · kg, 54 ft · lb)**

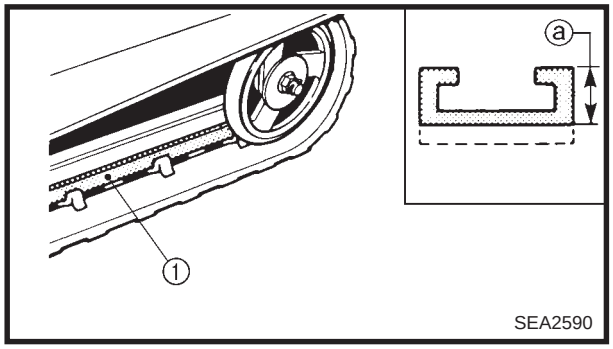

SLIDE RUNNER INSPECTION

1. Inspect:
   - Slide runner ①
     Cracks/damage/wear → Replace.
2. Measure:
   - Slide runner thickness ⓐ
     Out of specification → Replace.

Slide runner wear limit:
10 mm (0.39 in)

MAXIMIZING DRIVE TRACK LIFE

Recommendations

Track tension

During initial break-in, the new drive track will tend to stretch quickly as the track settles. Be sure to correct the track tension and alignment frequently. (See pages 2-27 ~ 2-28 for adjustment procedures.) A loose track can slip (ratchet), derail or catch on suspension parts causing severe damage. Do not overtighten the drive track, otherwise it may increase the friction between the track and the slide runnners, resulting in the rapid wear of both components. Also, this may put an excessive load on the suspension components, resulting in component failure.

Marginal snow

The drive track and the slide runners are lubricated and cooled by snow and water. To prevent the drive track and slide runners from overheating, avoid sustained high-speed usage in areas such as icy trails, frozen lakes and rivers that have minimal snow coverage. An overheated track will be weakened internally, which may cause failure or damage.

Off-trail riding

Avoid off-trail riding until there is sufficient snow coverage. It generally takes several feet of snow to provide a good overall base to properly cover debris, such as rocks, logs, etc. If snow coverage is not sufficient, stay on trails to avoid impact damage to the drive track.

Studded track

In general, track life will be shortened when studs are installed. Drilling stud holes into the drive track will cut the internal fibers, which weakens the track. Avoid spinning the drive track. Studs may catch on an object and pull out of the track, leaving tears and damage around the already weakened area. To minimize possible damage, consult your stud manufacturer for installation and stud pattern recommendations.

Yamaha does not recommend track studding.

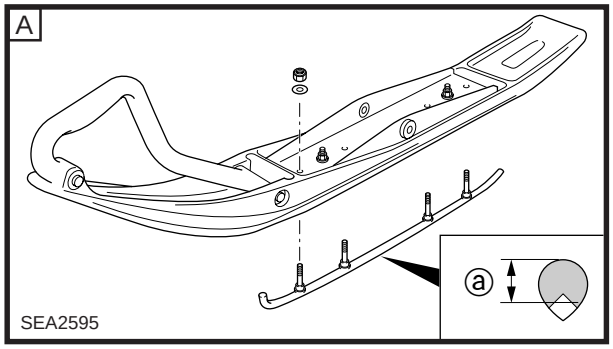

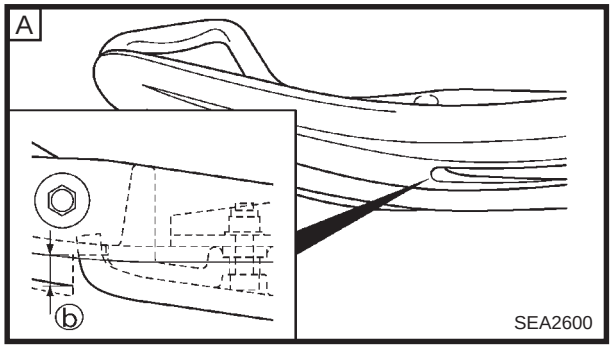

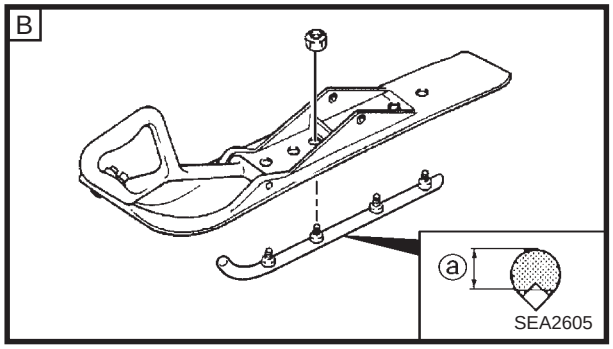

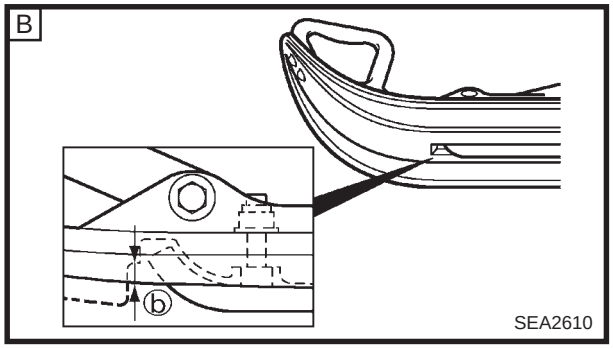

CHASSIS

SKI/SKI RUNNER

1. Inspect:
   - Ski
   - Ski runner

     Damage/wear → Replace.
2. Measure:
   - Ski runner wear limit ⓐ
   - Plastic ski wear limit ⓑ

     Out of specification → Replace.

Ski runner wear limit:
8 mm (0.31 in)
Plastic ski wear limit:
VX600ER/VT600:
13 mm (0.51 in)
SX600/MM600:
8 mm (0.31 in)

CAUTION:

To avoid scratching, wearing and damaging the plastic skis, be careful when loading and unloading the snowmobile and avoid riding in areas with little or no snow and on surfaces with sharp edges such as concrete, curbs, etc.

A VX600ER/VT600
B SX600/MM600

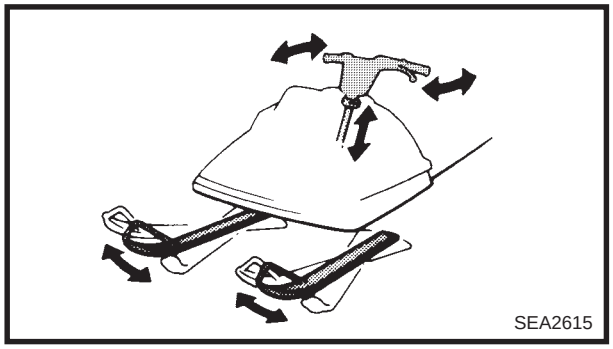

STEERING SYSTEM

Free play check

1. Check:
   - Steering system free play
     Move the handlebar up and down and back and forth.
     Turn the handlebar slightly to the right and left.
     Excessive free play → Check that the handlebar, tie rod ends and relay rod ends are installed securely in position. If free play still exists, check the steering bearing, front suspension links and ski mounting area for wear. Replace if necessary.

Toe-out adjustment

1. Place the machine on a level surface.
2. Check:
   - Ski toe-out (ⓐ – ⓒ)
     Point the skis forward.
     Out of specification → Adjust.
   - Ski stance (center to center) ⓑ

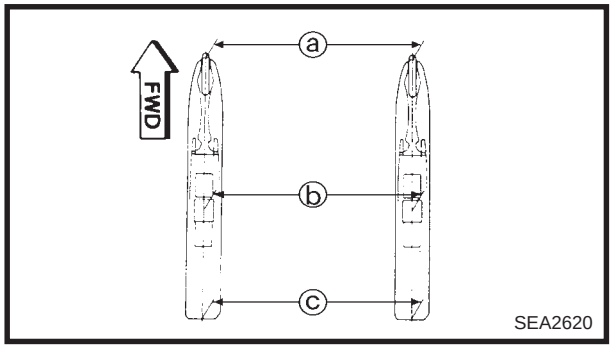

Ski toe-out:
0 ~ 15 mm (0 ~ 0.59 in)
Ski stance (center to center):
VX600ER/SX600/VT600:
1,070 mm (42.1 in)
MM600:
980 mm (38.6 in)

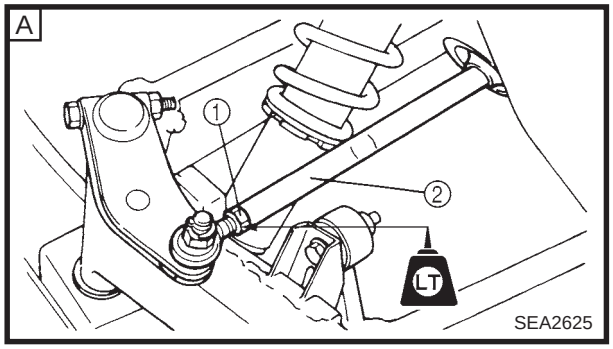

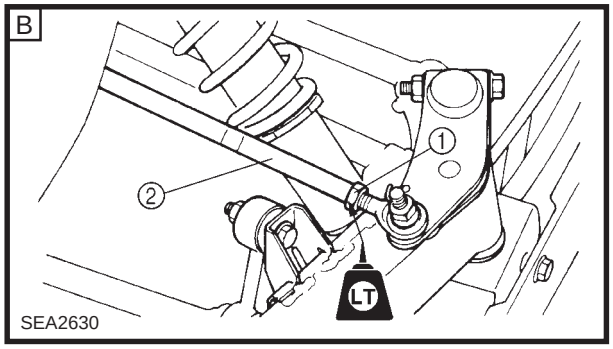

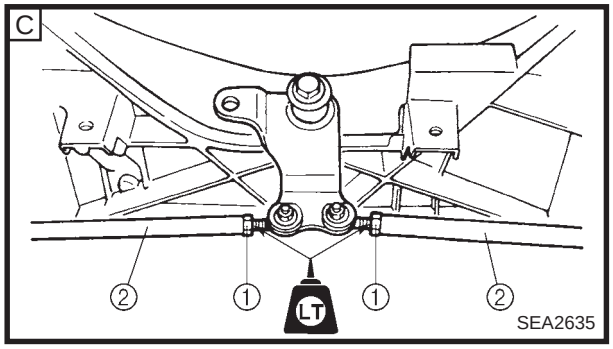

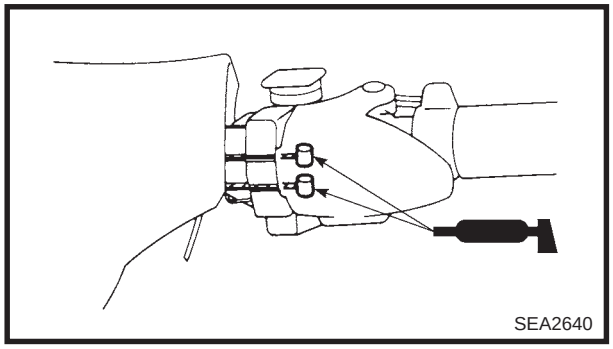

3. Adjust:
   - Ski toe-out

Adjustment steps:

- Loosen the locknuts (tie rod) ①.
- Turn the tie rods ② in or out until the specified toe-out is obtained.
- Tighten the locknuts (tie rod) ①.

Locknut (tie rod):
25 Nm (2.5 m · kg, 18 ft · lb)
LOCTITE®

CAUTION:

After tightening the inside and outside ball joint locknuts ①, make sure the tie rod ② can be rotated freely through the ball joint travel. If not, loosen the locknut ① and re-position the ball joint so that the tie rod ② can be rotated freely. Tighten the locknuts to specification.

A Left side
B Right side
C Inside

LUBRICATION

Brake lever, throttle lever and throttle cable end

1. Lubricate the brake lever pivot, throttle lever and the ends of the throttle cables.

Recommended lubricant:
ESSO Beacon 325 Grease

WARNING

Apply a dab of grease onto only the end of the cables.
Do not grease the throttle cables.
They could freeze and cause a loss of control.

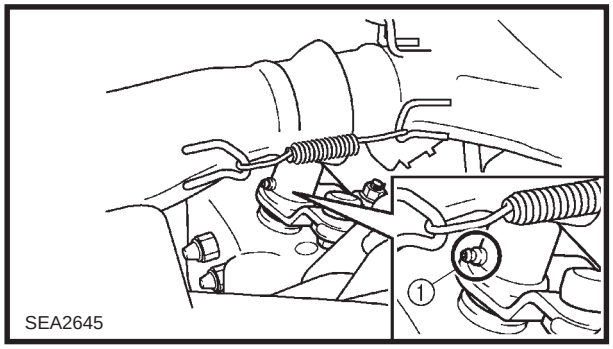

Relay arm (steering)

1. Use a grease gun to inject grease into the nipple ①.

Recommended lubricant:
ESSO Beacon 325 Grease or Aeroshell Grease #7A

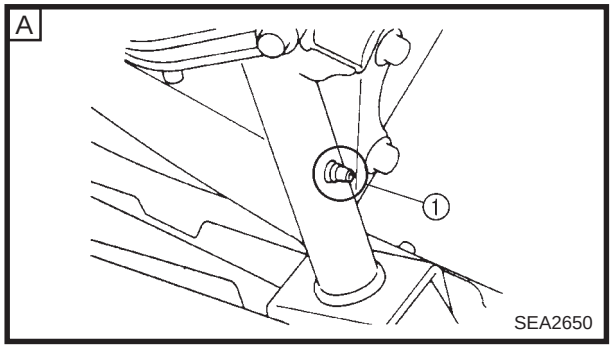

Front and rear suspension

1. Use a grease gun to inject grease into the nipples ①.
   Lubricate the ball joints ②, ③.

Recommended lubricant:
Esso Beacon 325 Grease or Aeroshell Grease #7A

A Front
B Rear (VX600ER/SX600/VT600)
C Rear (MM600)

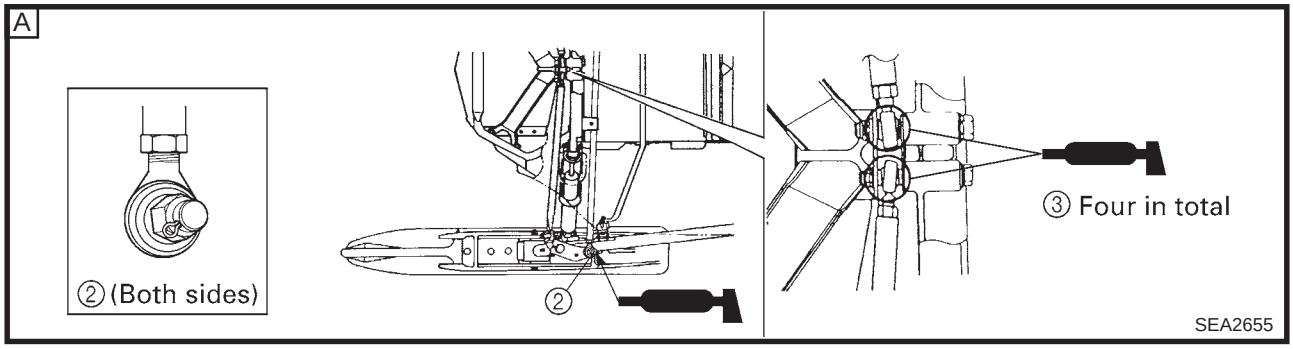

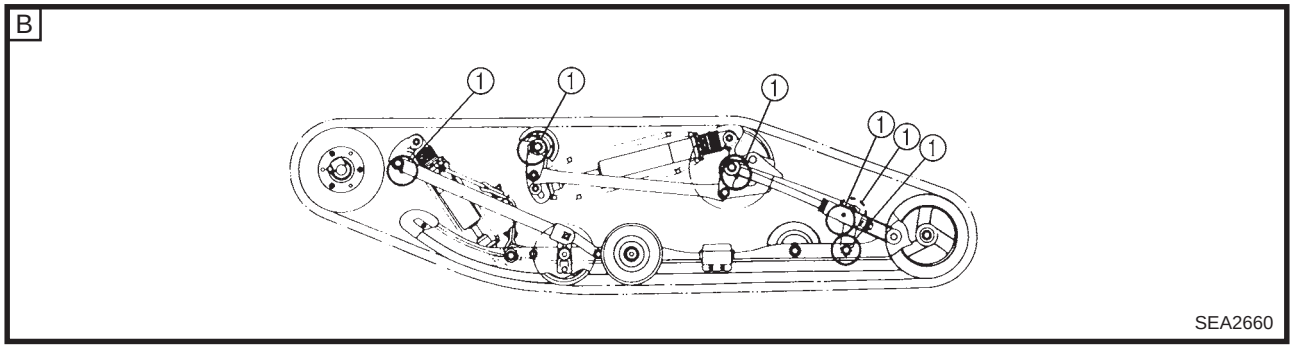

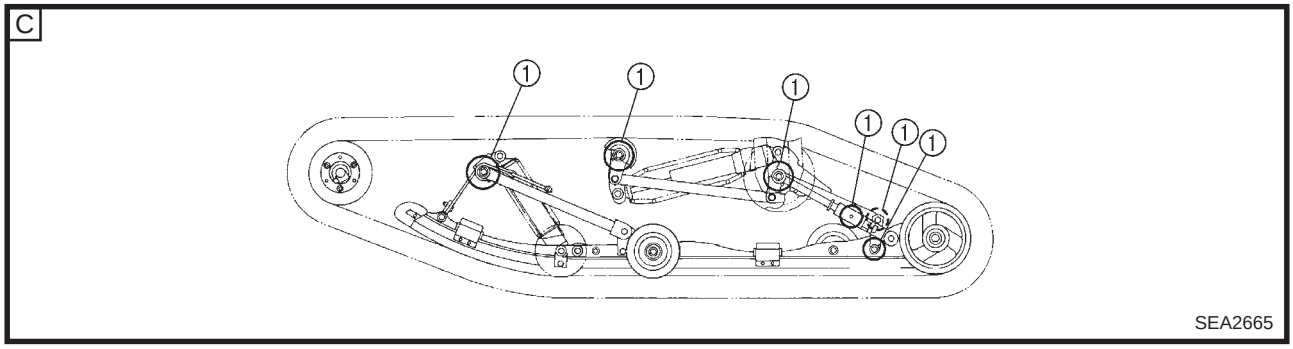

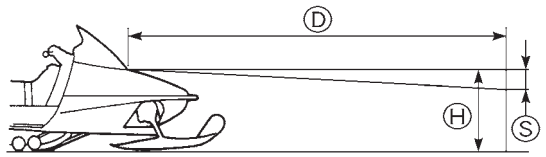

SEA2670

ELECTRICAL

HEADLIGHT BEAM ADJUSTMENT

1. Place the machine on a level surface.

2. Place the machine in front of a wall at the recommended distance Ⓓ. Refer to the table below.

3. Measure the distance Ⓗ from the floor to the center of the headlight and place a mark on the wall at that height.

4. With a person sitting on the machine, apply the parking brake, start the engine and let it idle.

5. Switch on the headlight's high beam and check the height of the projected beam on the wall. The projection should be at the position marked in step 3 or 1/2° lower (set range Ⓢ).

Ⓓ	**3.0 m (10 ft)**	**7.6 m (25 ft)**
Ⓢ	**26 mm (1.0 in)**	**66 mm (2.6 in)**

Ⓓ: Distance Ⓢ: Set range

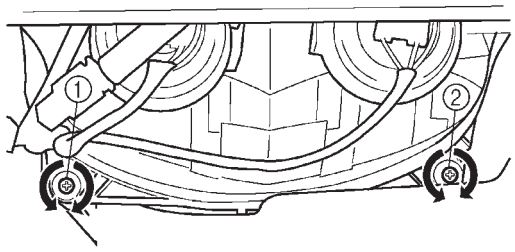

SEA2675

6. Adjust:
   - Headlight beam (vertically)

     Vertical adjustment

     Higher **Turn the adjusting screw ① + ② clockwise.**

     Lower **Turn the adjusting screw ① + ② counterclockwise.**

7. Adjust:
   - Headlight beam (horizontally)

     Horizontal adjustment

     To right **Turn the adjusting screw ① clockwise or turn the adjusting screw ② counterclockwise.**

     To left **Turn the adjusting screw ② clockwise or turn the adjusting screw ① counterclockwise.**

BATTERY INSPECTION (VX600ER/VT600)

⚠ WARNING

Battery fluid is poisonous and dangerous, causes severe burns, etc. Contains sulfuric acid. Avoid contact with skin, eyes or clothing.
Antidote:
EXTERNAL – Flush with water.
INTERNAL – Drink large quantities of water or milk. Follow with milk of magnesia, beaten egg or vegetable oil. Call a physician immediately.
Eyes: Flush with water for 15 minutes and get prompt medical attention.
Batteries produce explosive gases. Keep sparks, flames, cigarettes, etc. away. Ventilate when charging or using in enclosed space. Always shield eyes when working near batteries.
KEEP OUT OF REACH OF CHILDREN.

1. Remove:
   - Battery

⚠ WARNING

When removing the battery, disconnect the negative lead first.

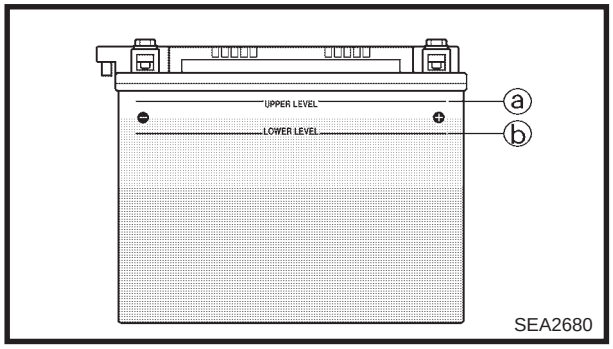

2. Inspect:
   - Fluid level should be between “UPPER LEVEL” ⓐ and “LOWER LEVEL” ⓑ marks.
     Incorrect → Refill.

CAUTION:

Refill with distilled water only; tap water contains minerals harmful to a battery.

3. Check:
   - Specific gravity.
     Less than 1.280 → Recharge battery.

Specific gravity:
1.280 at 20°C (68°F)

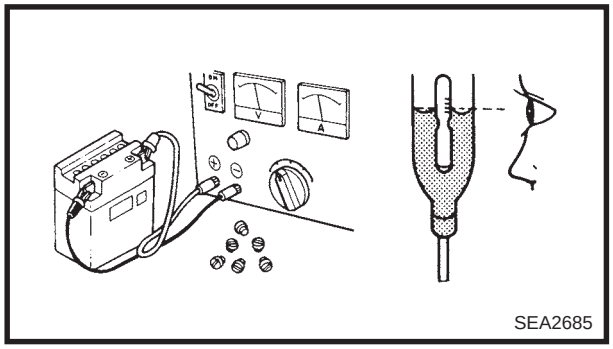

SEA2685

Replace the battery if:

- Battery voltage will not rise to a specific value or bubbles fail to rise even after many hours of charging.
- Sulfation of one or more cells occurs, as indicated by the plates turning white, or an accumulation of material exists in the bottom of the cell.
- Specific gravity readings after a long, slow charge indicate one cell to be lower than the rest.
- Warpage or buckling of plates or insulators is evident.

CAUTION:

Always charge a new battery before using it to ensure maximum performance.

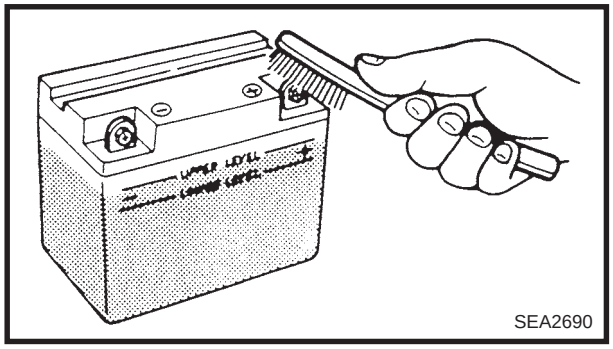
SEA2690

4. Inspect:
   - Battery terminal
     Dirty terminal → Clean with a wire brush.
     Poor connection → Correct.

NOTE:

After cleaning the terminals, apply grease lightly to the terminals.

5. Install:
   - Battery

CAUTION:

- **Connect the positive lead to the battery terminal first.**
- **Make sure the battery leads are connected properly. Reversing the leads can seriously damage the electrical system.**
- **Make sure that the battery breather hose is properly connected and is not obstructed.**

BATTERY CHARGING (VX600ER/VT600)

The battery must be charged properly before using for the first time. This initial charge will prolong the life of the battery.

1. Remove:
   - Battery

WARNING

When removing the battery, disconnect the negative lead first.

Battery charging step:

- Remove all filler caps from the battery.

NOTE

Place the battery on a level place.

- Cool the electrolyte down to below 30°C (86°F).
- Pour electrolyte into each cell little by little up to the upper level line, and leave it for a while. When the battery fluid permeates the plates and separators, the fluid level begins to lower. Add electrolyte and bring back to upper level line.

NOTE:

Fill the battery with diluted sulfuric acid (electrolyte).

- Connect the battery to a battery charger ①.
- Set the battery charger rate at 1/10 the battery capacity and charge the battery for 10 hours.

Charging Rate:
2.0 Ah × 10 hours

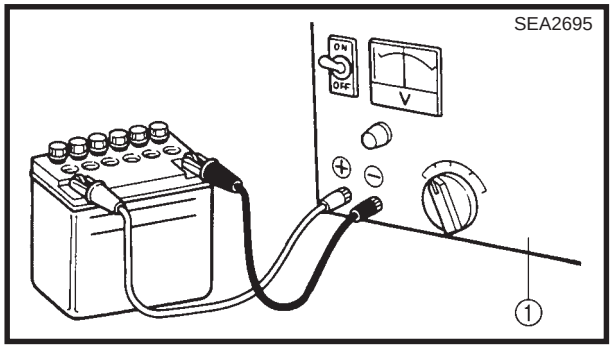

- Turn the battery charger off then disconnect it from the battery.
- Check the specific gravity of each cell with a hydrometer. If the hydrometer reading is below the specification, additional charging is necessary.
- Install the filler caps, and thoroughly wipe off the fluid around the filler caps.

2. Install:
   - Battery

CAUTION:

- **Connect the positive lead to the battery terminal first.**
- **Make sure the battery leads are connected properly. Reversing the leads can seriously damage the electrical system.**
- **Make sure that the battery breather hose is properly connected and is not obstructed.**

FUSE INSPECTION (VX600ER/VT600)

The following procedure applies to all of the fuses.

CAUTION:

To avoid a short circuit, always set the main switch to "OFF" when checking or replacing a fuse.

1 .Check:
   - Continuity

Checking steps:

- Connect the pocket tester to the fuse and check the continuity.

NOTE:

Set the pocket tester selector to "Ω × 1".

	**Pocket tester:** **90890-03112, YU-03112**

- If the pocket tester indicates "∞", replace the fuse.

2. Replace:
   - Blown fuse

Replacing steps:
- Set the main switch to “OFF”.
- Install a new fuse of the correct amperage.
- Set the main switch to “ON” and verify if the electrical circuit is operational.
- If the fuse immediately blows again, check the electrical circuit.

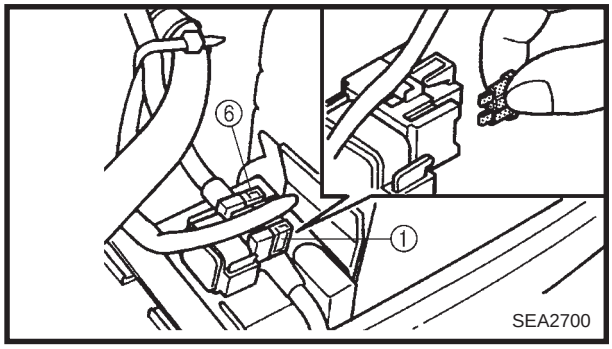

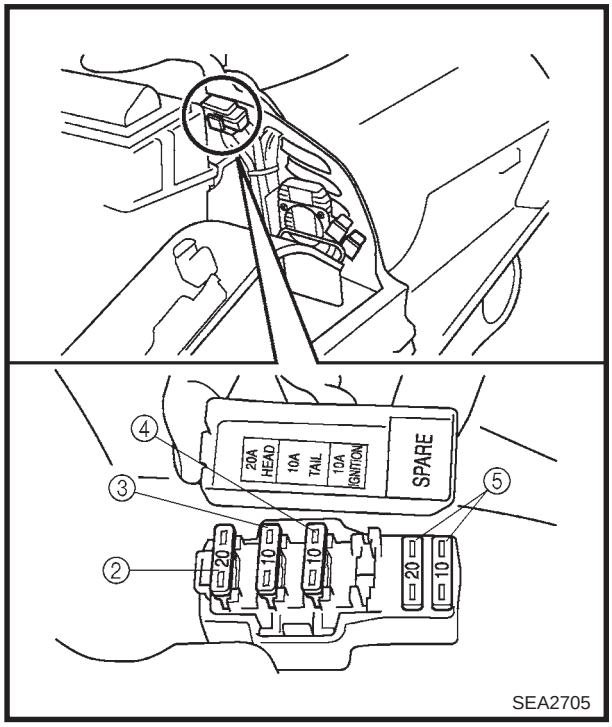

Item	Amperage	Q’ty
① Main fuse	30 A	1
② “HEAD” fuse	20 A	1
③ “TAIL” fuse	10 A	1
④ “IGNITION” fuse	10 A	1
⑤ Reserve fuse	20 A 10 A	1 1
⑥ Reserve fuse	30 A	1

⚠ WARNING

Never use a fuse with an amperage other than that specified. Improvising or using a fuse with the wrong amperage rating may cause extensive damage to the electrical system, cause the lighting, ignition, grip warmer, signal and meter systems to malfunction and could possibly cause a fire.

TUNING

CARBURETOR TUNING

The carburetors are set at the factory to run at temperatures of 0°C ~ –20°C (32°F ~ –4°F) at sea level. If the machine is to be operated under conditions other than those specified above, the carburetors must be properly adjusted. Special care should be taken in carburetor setting so that the pistons will not be damaged or will not seize.

CAUTION:

Engine oil is mixed with fuel just before the fuel enters the carburetors. During initial fuel flow to the carburetors, it is not always possible to supply the optimum fuel/oil mixture depending on the throttle opening. Therefore, after the carburetors have been tuned or maintained, or after the float chambers are removed for cleaning or jet replacement, be sure to idle the engine for about three minutes in order to avoid engine trouble.

CAUTION:

Before performing the carburetor tuning, make sure that the following items are set to specification.

- **Engine idle speed**
- **Throttle cable free play**
- **Carburetor synchronization**
- **Starter cable free play**
- **Oil pump cable free play**

Carburetor tuning data

1. Standard specifications

A	**Type:**	**TM31**
B	**Manufacturer:**	**MIKUNI**
C	**I.D. Mark:**	**8DG100**
D	**Main jet (M.J.):**	**#1:136.3, #2, #3:133.8**
E	**Pilot jet (P.J.):**	**#42.5**
F	**Pilot screw (P.S.):**	**2 turns out**
G	**Float height:**	**11.3 ~ 15.3 mm (0.44 ~ 0.60 in)**
H	**Idle speed:**	**1,600 ± 100 r/min**

Mid-range and high speed tuning

Adjustments are normally not required, but may sometimes be necessary, depending on temperatures, altitude or both.

Mid-range speed and high speed tuning (from 1/4 to full-throttle) can be done by adjusting the main jet.

CAUTION:

Never run the engine without the air intake silencer installed. Severe engine damage may result.

1. Start the engine and operate the machine under normal conditions to make sure that the engine operates smoothly. Stop the engine.
2. Remove:
   - Spark plugs

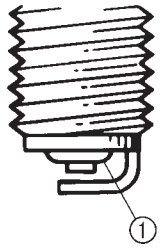

SEA2710

3. Check:
   - Spark plug insulator ① color
     A medium to light tan color indicates normal conditions.
     Distinctly different color → Replace the main jet.
4. The main jet should be adjusted on the basis of the “Main jet selection chart”.

NOTE:

By checking the condition of the spark plugs, it is easy to get some idea of the condition of the engine. This may diagnose potential problems before engine damage occurs.

High altitude tuning

Use the chart in CHAPTER 9 to select main jets according to variations in elevation and temperature.

NOTE:

These jetting specifications are subject to change. Consult the latest technical information from Yamaha to be sure you have the most up-to-date jetting specifications.

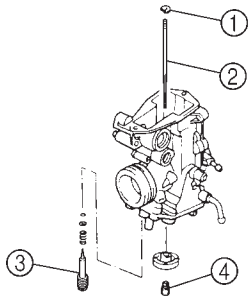

SEA2715

① Clip
② Jet needle
③ Pilot mixture screw
④ Main jet

Guide for carburetion

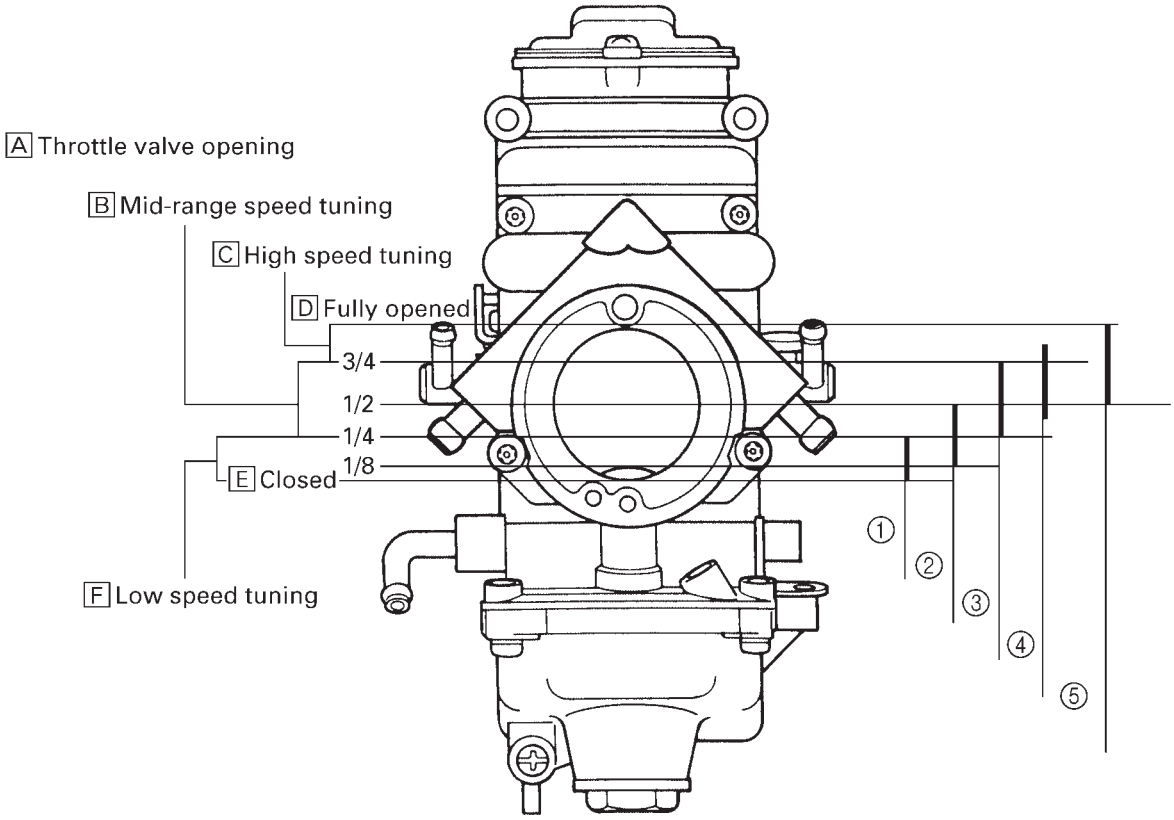

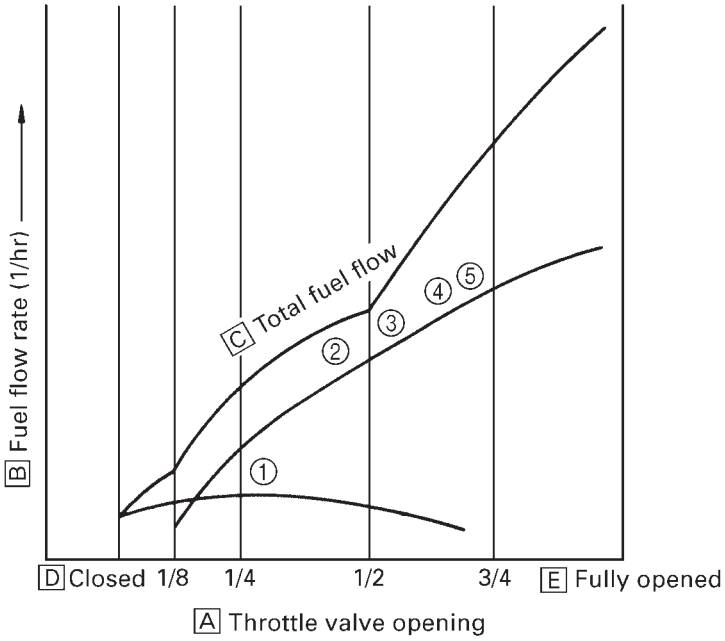

SEA2720

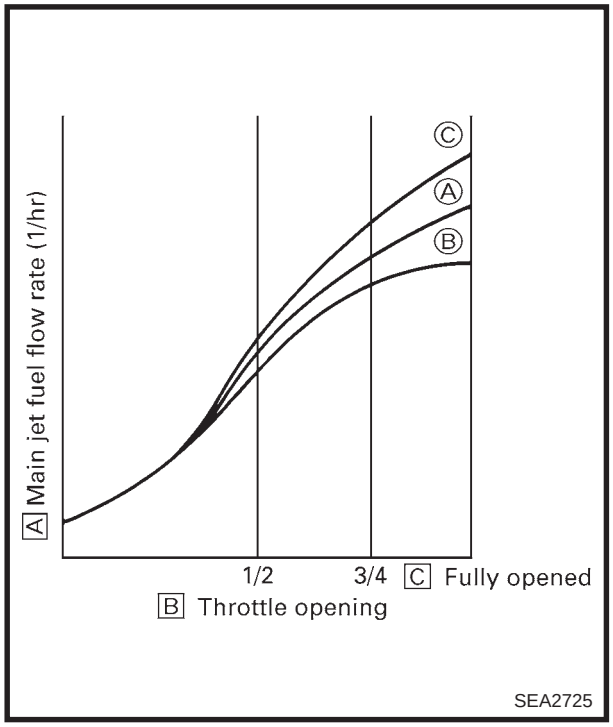

Ⓐ Standard main jet
Ⓑ Main jet whose diameter is 10% smaller than standard
Ⓒ Main jet whose diameter is 10% larger than standard

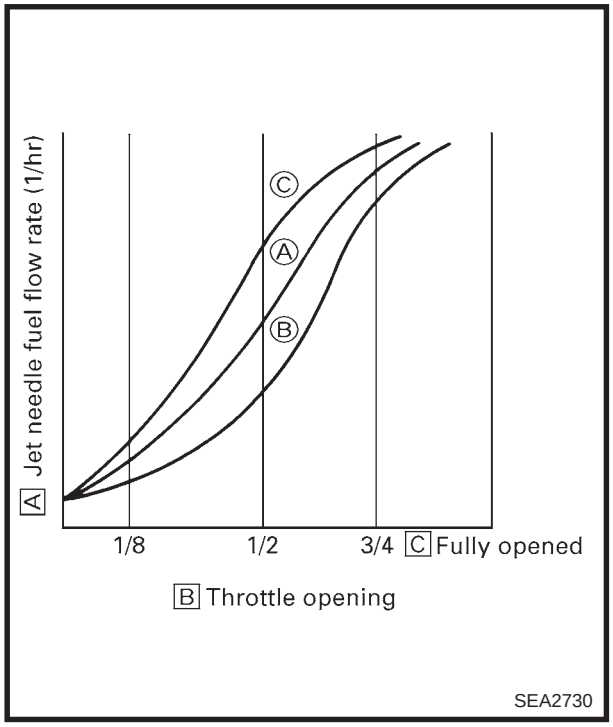

Ⓐ No. ② position
Ⓑ No. ① position
Ⓒ No. ③ position

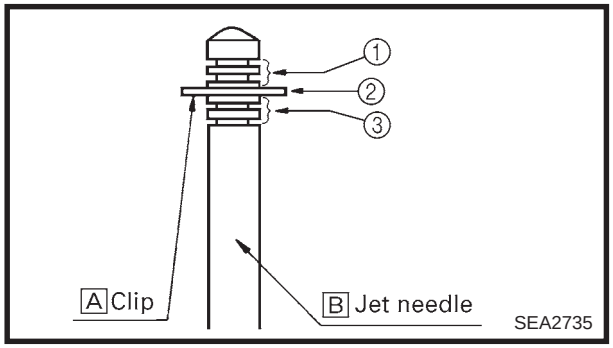

CAUTION:

If the intake silencer is removed from the carburetors, the change in pressure in the intake will create a lean mixture that may cause severe engine damage. The intake silencer has no effect on performance characteristics and must be secured to the carburetors during carburetor tuning and adjustment. Also, it must always be in place when the engine is operated. Regularly clean the silencer and keep it free from obstructions.

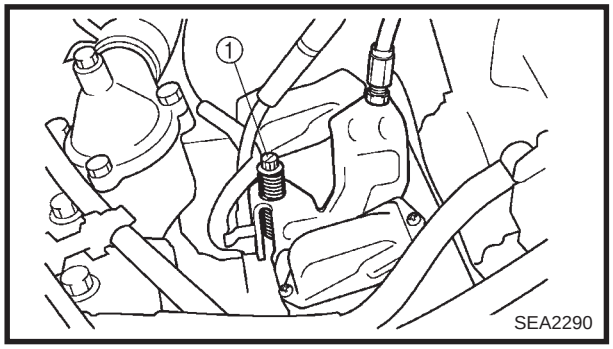

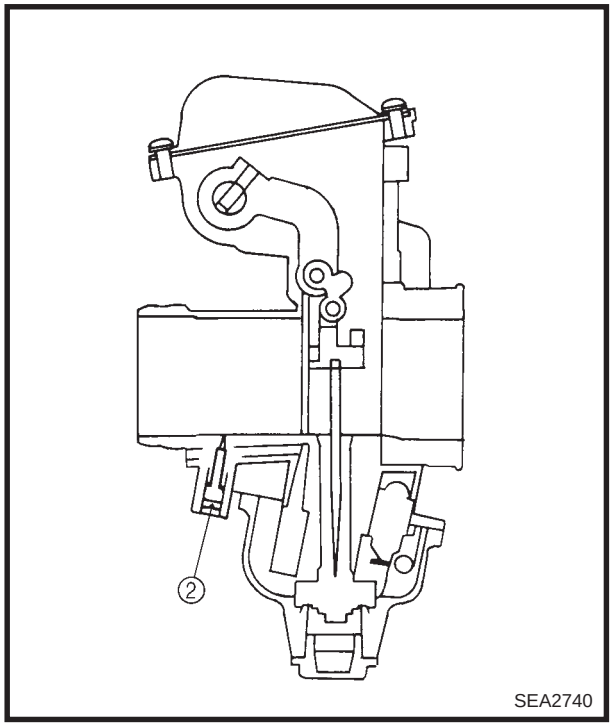

Low-speed tuning

The carburetors are built so that low speed tuning can be done by adjusting the pilot mixture screw ② and throttle stop screw ①.

CAUTION:

Never run the engine without the air intake silencer installed. Severe engine damage may result.

1. Tighten the pilot mixture screw ② until it is lightly seated and then back it out the specified number of turns.

Pilot mixture screw ②:
2 turns out

Pilot mixture screw effects:

Turn in ←	STD setting	→ Turn out
Leaner Mixture	⟷	Richer Mixture

2. Set the engine idle speed by turning the throttle stop screw in (to increase engine speed) or out (to decrease engine speed).

Engine idle speed:
1,600 ± 100 r/min

3. If low-speed performance is still poor at higher elevations under extreme conditions, the standard pilot jets may need to be replaced. In this way, the proper air/fuel mixture is obtained.

NOTE:

In this case, use a larger numbered pilot jet to enrich the air/fuel mixture.

Standard pilot jet:
#42.5

Main jet selection chart		
Spark plug color	Diagnosis	Remedy
Light tan or gray	Carburetors are tuned properly.	
Dry black or fluffy deposits	Mixture is too rich.	Replace the main jet with the next smaller size.
White or light gray	Mixture is too lean.	Replace the main jet with the next larger size.
White or gray insulator with small black or grayish brown spots and electrodes having a bluish-burnt appearance	Mixture is too lean. The piston is damaged or seized.	Replace the piston and spark plug. Tune the carburetors again. Begin with low-speed tuning.
Melted electrodes and possibly a blistered insulator Metallic deposits on insulator	Mixture is too lean. The spark plug melted.	Check the piston for holes or seizure. Check the cooling system, gasoline octane rating and ignition timing. After replacing the spark plug with a colder type, tune the carburetors again. Begin with low-speed tuning.

Troubleshooting

Trouble	Diagnosis	Adjustment
Hard starting	Insufficient fuel	Add gasoline.
	Excessive use of the starter or choke	Return the starter lever to its seated position so that the starter valve is fully closed.
	Fuel passage is clogged or frozen	• Check and, if necessary, clean the fuel tank air vent, the fuel filter and all of the fuel passages. • Check and, if necessary, clean the carburetor air vents, fuel passages and the float valve. • Clean the float chamber of any ice or water.
	Overflow	Adjust the fuel level.
Poor idling: • Poor performance at low speeds • Poor acceleration • Slow response to throttle • Engine tends to stall	Improper idling speed adjustment	Adjust the engine idle speed. Refer to “Low speed tuning”.
	Damaged pilot screw	Replace the pilot screw.
	Clogged bypass hole	Clean the bypass hole.
	Clogged or loose pilot jet	• Remove the pilot jet, clean it with compressed air and then install it. • Make sure that the pilot jet is fully tightened.
	Air leaking into the carburetor joint	Retighten the clamp screws on the carburetor joints.
	Defective starter valve seat	Clean or replace the starter valve seat.
	Overflow	Adjust the fuel level.

Trouble	Diagnosis	Adjustment
Poor performance at mid-range speeds: • Momentary slow response to the throttle	Clogged or loose pilot jet	• Remove the pilot jet, clean it with compressed air, and then install it. • Make sure that the pilot jet is fully tightened.
• Poor acceleration	Lean mixture	Overhaul the carburetors.
Poor performance at normal speeds: • Excessive fuel consumption • Poor acceleration	Clogged air vent	Remove the air vent hose and clean it.
	Clogged or loose main jet	• Remove the main jet, clean it with compressed air, and then install it. • Make sure that the main jet is fully tightened.
	Overflow	Check and, if necessary, clean the float and float valve.
Poor performance at high speeds: • Power loss • Poor acceleration	Starter valve is left open	Return the starter lever to its seated position so that the starter valve is fully closed.
	Clogged air vent	Remove and clean the air vent.
	Clogged or loose main air jet	• Remove the main jet, clean it with compressed air, and then install it. • Make sure that the main jet is fully tightened.
	Clogged fuel line	Clean or replace the fuel line.
	Dirty fuel tank	Clean the fuel tank.
	Air leaks into the fuel line	Tighten or replace the fuel line joint.
	Low fuel pump performance	Repair or replace the fuel pump.
	Clogged fuel filter	Replace the fuel filter.
	Clogged intake	Remove any obstructions (e.g., ice).
Abnormal combustion:	Lean mixture	Clean and adjust the carburetors.
	Dirty carburetors	Clean the carburetors.
• Backfiring	Dirty or clogged fuel line	Clean or replace the fuel line.
Overflow: • Poor idling • Poor performance at low, mid-range, and high speeds • Excessive fuel consumption • Hard starting • Power loss • Poor acceleration	Clogged air vent	Clean the air vent.
	Clogged float valve	• Disassemble and clean the float valve. • Do not scratch the valve seat.
	Scratched or unevenly worn float valve or valve seat	• Clean or replace the float valve and valve seat. • The valve seat and body must be replaced as a set.
	Broken float	Replace the float.
	Incorrect float level	Check and, if necessary, replace the following parts: • Float tang • Float (entire assembly) • Arm pin

CLUTCH
High altitude

G	Green
R	Red
Y	Yellow

Specifications **Model: VX600ER**

A Elevation	~ 1,000 m (~ 3,500 ft)	900 ~ 1,500 m (3,000 ~ 5,000 ft)	1,400 ~ 2,100 m (4,500 ~ 7,000 ft)	2,000 ~ 3,000 m (6,500 ~ 10,000 ft)
B Engine idle speed	1,600 ± 100 r/min	←	←	←
C Engagement r/min	4,000 ± 200 r/min	4,100 ± 200 r/min	4,200 ± 200 r/min	←
D Shift r/min	8,500 ± 250 r/min	←	←	←
E Main jet	d Refer to “HIGH ALTITUDE SETTINGS” in “MAINTENANCE SPECIFICATIONS”.			
F Pilot jet				
G Pilot screw				
H Secondary reduction ratio (number of links)	39/21 (68 L)	39/20 (68 L)	39/19 (68 L)	39/18 (68 L)
I Primary sheave spring	90501-582L7	←	90501-602L8	←
J Color	Y-G-Y	←	G-G-G	←
K Free length	89.4 mm (3.52 in)	←	87.9 mm (3.46 in)	←
L Preload	392 N (40 kg, 88 lb)	←	←	←
M Spring rate	24.5 N/mm (2.50 kg/mm, 140 lb/in)	←	27.0 N/mm (2.75 kg/mm, 154 lb/in)	←
N Wire diameter	5.8 mm (0.228 in)	←	6.0 mm (0.236 in)	←
O Outside diameter	60 mm (2.362 in)	←	←	←
P Weight (ID)	8DG-17605-00 (8DG00)	←	←	←
Q Weight rivet	Aluminum 10.3 (OUT) Steel 13.9 (IN)	None (OUT) Steel 13.9 (IN)	None (OUT) Steel 10.3 (IN)	Aluminum 10.3 (OUT) None (IN)
R Weight bushing	Duralon	←	←	←
S Roller outer dia.	15.0 mm (0.59 in)	←	←	←
T Roller bushing	Duralon	←	←	←
U Pri. clutch shim	None	←	←	←
V Secondary sheave spring	90508-536A9	←	←	←
W Color	R	←	←	←
X Free length	75 mm (2.95 in)	←	←	←
Y Preload rate	80° (2-6) 729 kg·mm/rad	←	←	←
Z Wire diameter	5.3 mm (0.209 in)	←	←	←
a Outside diameter	69.5 mm (2.736 in)	←	←	←
b Sec. torque cam angle	47°	←	←	←
C Sec. clutch shim	1.0 mm (0.04 in)	←	←	←

G	Green	S	Silver
P	Pink	Y	Yellow
R	Red		

Specifications Model: SX600

A Elevation	~ 1,000 m (~ 3,500 ft)	900 ~ 1,500 m (3,000 ~ 5,000 ft)	1,400 ~ 2,100 m (4,500 ~ 7,000 ft)	2,000 ~ 3,000 m (6,500 ~ 10,000 ft)
B Engine idle speed	1,600 ± 100 r/min	←	←	←
C Engagement r/min	4,200 ± 200 r/min	←	4,100 ± 200 r/min	4,200 ± 200 r/min
D Shift r/min	8,500 ± 250 r/min	←	←	←
E Main jet	d Refer to “HIGH ALTITUDE SETTINGS” in “MAINTENANCE SPECIFICATIONS”.			
F Pilot jet				
G Pilot screw				
H Secondary reduction ratio (number of links)	39/20 (68 L)	39/19 (68 L)	39/18 (68 L)	←
I Primary sheave spring	90501-582L7	←	90501-602L3	←
J Color	Y-G-Y	←	P-S-P	←
K Free length	89.4 mm (3.52 in)	←	85.1 mm (3.35 in)	←
L Preload	392 N (40 kg, 88 lb)	←	343 N (35 kg, 77 lb)	←
M Spring rate	24.5 N/mm (2.50 kg/mm, 140 lb/in)	←	29.4 N/mm (3.00 kg/mm, 168 lb/in)	←
N Wire diameter	5.8 mm (0.228 in)	←	6.0 mm (0.236 in)	←
O Outside diameter	60 mm (2.362 in)	←	←	←
P Weight (ID)	8DG-17605-00 (8DG00)	←	←	←
Q Weight rivet	Steel 10.3 (OUT) Steel 13.9 (IN)	Aluminum 10.3 (OUT) Steel 13.9 (IN)	Aluminum 10.3 (OUT) Steel 10.3 (IN)	Aluminum 10.3 (OUT) Aluminum 10.3 (IN)
R Weight bushing	Duralon	←	←	←
S Roller outer dia.	14.5 mm (0.57 in)	←	←	←
T Roller bushing	Duralon	←	←	←
U Pri. clutch shim	None	←	←	←
V Secondary sheave spring	90508-536A9	←	←	←
W Color	R	←	←	←
X Free length	75 mm (2.95 in)	←	←	←
Y Preload rate	80° (2-6) 729 kg·mm/rad	←	90° (3-6) 729 kg·mm/rad	←
Z Wire diameter	5.3 mm (0.209 in)	←	←	←
a Outside diameter	69.5 mm (2.736 in)	←	←	←
b Sec. torque cam angle	47°	←	←	←
C Sec. clutch shim	1.0 mm (0.04 in)	←	←	←

R	Red
W	White
Y	Yellow

Specifications Model: MM600

A Elevation	~ 1,000 m (~ 3,500 ft)	900 ~ 1,500 m (3,000 ~ 5,000 ft)	1,400 ~ 2,100 m (4,500 ~ 7,000 ft)	2,000 ~ 3,000 m (6,500 ~ 10,000 ft)
B Engine idle speed	1,600 ± 100 r/min	←	←	←
C Engagement r/min	4,400 ± 200 r/min	4,500 ± 200 r/min	4,600 ± 200 r/min	←
D Shift r/min	8,500 ± 250 r/min	←	←	←
E Main jet	d Refer to “HIGH ALTITUDE SETTINGS” in “MAINTENANCE SPECIFICATIONS”.			
F Pilot jet				
G Pilot screw				
H Secondary reduction ratio (number of links)	39/21 (68 L)	←	39/19 (68 L)	←
I Primary sheave spring	90501-603L2	←	←	←
J Color	Y-W-Y	←	←	←
K Free length	91.4 mm (3.60 in)	←	←	←
L Preload	441 N (45 kg, 99 lb)	←	←	←
M Spring rate	24.5 N/mm (2.50 kg/mm, 140 lb/in)	←	←	←
N Wire diameter	6.0 mm (0.236 in)	←	←	←
O Outside diameter	60 mm (2.362 in)	←	←	←
P Weight (ID)	8DG-17605-00 (8DG00)	←	←	←
Q Weight rivet	Steel 17.2 (OUT) Steel 17.2 (IN)	Steel 13.3 (OUT) Steel 13.9 (IN)	Steel 13.3 (OUT) Steel 10.3 (IN)	Aluminum 10.3 (OUT) Steel 10.3 (IN)
R Weight bushing	Duralon	←	←	←
S Roller outer dia.	15.6 mm (0.61 in)	←	←	←
T Roller bushing	Duralon	←	←	←
U Pri. clutch shim	None	←	←	←
V Secondary sheave spring	90508-536A9	←	←	←
W Color	R	←	←	←
X Free length	75 mm (2.95 in)	←	←	←
Y Preload rate	80° (2-6) 729 kg·mm/rad	←	←	←
Z Wire diameter	5.3 mm (0.209 in)	←	←	←
a Outside diameter	69.5 mm (2.736 in)	←	←	←
b Sec. torque cam angle	43°	←	←	←
C Sec. clutch shim	1.0 mm (0.04 in)	←	←	←

G	Green
P	Pink
S	Silver
R	Red

Specifications Model: VT600

A Elevation	~ 1,000 m (~ 3,500 ft)	900 ~ 1,500 m (3,000 ~ 5,000 ft)	1,400 ~ 2,100 m (4,500 ~ 7,000 ft)	2,000 ~ 3,000 m (6,500 ~ 10,000 ft)
B Engine idle speed	1,600 ± 100 r/min	←	←	←
C Engagement r/min	4,000 ± 200 r/min 3,900 ± 200 r/min (for Europe)	4,100 ± 200 r/min 4,000 ± 200 r/min (for Europe)	4,200 ± 200 r/min	←
D Shift r/min	8,500 ± 250 r/min	←	←	←
E Main jet F Pilot jet G Pilot screw	d Refer to “HIGH ALTITUDE SETTINGS” in “MAINTENANCE SPECIFICATIONS”.			
H Secondary reduction ratio (number of links)	39/20 (68 L) 39/18 (68 L) (for Europe)	39/19 (68 L) 39/18 (68 L) (for Europe)	39/18 (68 L)	←
I Primary sheave spring	90501-602L9 90501-582L2 (for Europe)	←	90501-602L9	←
J Color	P-G-P G-S-G (for Europe)	←	P-G-P	←
K Free length	86.7 mm (3.41 in) 87.4 mm (3.44 in) (for Europe)	←	86.7 mm (3.41 in)	←
L Preload	392 N (40 kg, 88 lb) 343 N (35 kg, 77 lb) (for Europe)	←	392 N (40 kg, 88 lb)	←
M Spring rate	29.4 N/mm (3.00 kg/mm, 168 lb/in) 27.0 N/mm (2.75 kg/mm, 154 lb/in) (for Europe)	←	29.4 N/mm (3.00 kg/mm, 168 lb/in)	←
N Wire diameter	6.0 mm (0.236 in) 5.8 mm (0.228 in) (for Europe)	←	6.0 mm (0.236 in)	←
O Outside diameter	60 mm (2.362 in)	←	←	←
P Weight (ID)	8DG-17605-00 (8DG00)	←	←	←
Q Weight rivet	Steel 13.9 (OUT) Steel 17.2 (IN)	Steel 10.3 (OUT) Steel 13.9 (IN) Steel 17.2 (IN) (for Europe)	Aluminum 10.3 (OUT) Steel 13.9 (IN)	None (OUT) Steel 13.3 (IN)
R Weight bushing	Duralon	←	←	←

G	Green
P	Pink
S	Silver
R	Red

Specifications Model: VT600

A Elevation	~ 1,000 m (~ 3,500 ft)	900 ~ 1,500 m (3,000 ~ 5,000 ft)	1,400 ~ 2,100 m (4,500 ~ 7,000 ft)	2,000 ~ 3,000 m (6,500 ~ 10,000 ft)
S Roller outer dia.	14.5 mm (0.57 in)	←	←	←
T Roller bushing	Duralon	←	←	←
U Pri. clutch shim	None	←	←	←
V Secondary sheave spring	90508-536A9 90508-556A2 (for Europe)	←	90508-536A9	←
W Color	R G (for Europe)	←	R	←
X Free length	75 mm (2.95 in)	←	←	←
Y Preload rate	70° (1-6) 729 kg·mm/rad 80° (2-6) 848 kg·mm/rad	←	70° (1-6) 729 kg·mm/rad	←
Z Wire diameter	5.3 mm (0.209 in) 5.5 mm (0.217 in) (for Europe)	←	5.3 mm (0.209 in)	←
a Outside diameter	69.5 mm (2.736 in)	←	←	←
b Sec. torque cam angle	43°	←	←	←
c Sec. clutch shim	1.0 mm (0.04 in)	←	←	←

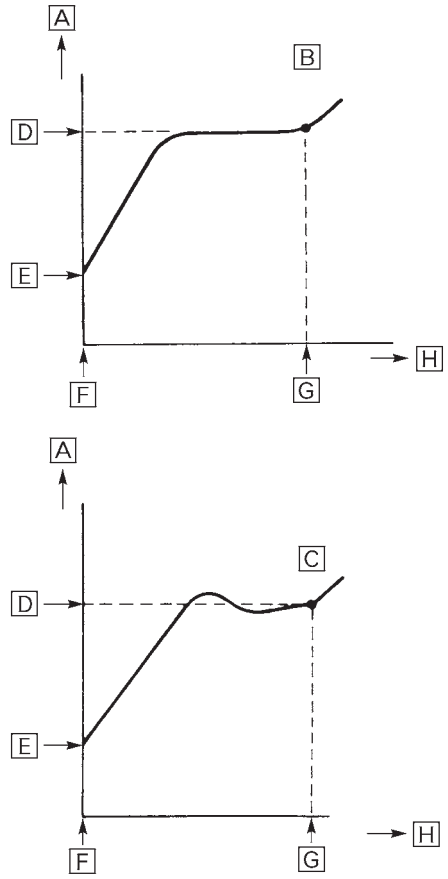

SEA2745

The clutch may require tuning depending upon where the machine will be operated and the desired handling characteristics. The clutch can be tuned by changing the engagement and shifting speeds.

Clutch engagement speed is defined as the engine speed at which the machine first begins to move from a complete stop.

Clutch shifting speed is defined as the engine speed reached when the machine has travelled 200 ~ 300 m (650 ~ 1,000 ft) after being started at full-throttle from a dead stop.

Normally, when a machine reaches shifting speed, the vehicle speed increases but the engine speed remains nearly constant. Under unfavorable conditions (wet snow, icy snow, hills, or rough terrain), however, engine speed may decrease after the shifting speed has been reached.

A Engine speed
B Good condition
C Bad condition
D Clutch shifting speed
E Clutch engagement speed
F Starting position
G 200 ~ 300 m (650 ~ 1,000 ft)
H Distance travelled

GEAR SELECTION

The reduction ratio of the driven gear to the drive gear must be set according to the snow conditions. If there are many rough surfaces or unfavorable snow conditions, the drive/driven gear ratio should be increased. If the surfaces are fairly smooth or better snow conditions exist, decrease the ratio.

Gear ratio chart

The drive and driven gears and the chains shown in the gear ratio chart are available as options. The figures containing a decimal point represent the drive/driven gear ratios, while the bottom numbers designate the number of links in the chain.

① Chain and sprocket part number

A Part name	B Teeth & links	C Part no.	D Standard
E Drive sprocket	18 teeth	89J-17682-80	VT600 for Europe
	19 teeth	89J-17682-91	MM600
	20 teeth	89J-17682-00	SX600 VT600 for U.S.A./Canada
	21 teeth	89J-17682-10	VX600ER
	22 teeth	89J-17682-20	
	23 teeth	89J-17682-30	
F Driven sprocket	39 teeth	8CW-47587-90	VX600ER/VT600
	39 teeth	89J-47587-90	SX600/MM600
	40 teeth	89J-47587-00	
G Chain	68 links	94860-02068	VX600ER/SX600/MM600/VT600
	70 links	94860-02070	

② Gear ratio

A Drive sprocket / B Driven sprocket	18 teeth	19 teeth	20 teeth	21 teeth	22 teeth	23 teeth
39 teeth	2.167 68 links	2.053 68 links	1.950 68 links	1.857 68 links	1.773 70 links	1.696 70 links
40 teeth	2.222 68 links	2.105 68 links	2.000 68 links	1.905 70 links	1.818 70 links	1.739 70 links

③ Secondary sheave spring

A Part no.	B Spring rate (torsion) N·mm/rad (kg·mm/rad)	C Spring rate (compression) N/mm (kg/mm) (lb/in)	D Color	E Wire gauge mm (in)	F No. of coils	G Free length mm (in)	H Outside diameter mm (in)	I Standard
90508-500B1	6003 (613)	6.2 (0.63), 35.28	Brown	5.0 (0.196)	5.19	75 (2.95)	69.5 (2.736)	
90508-536A9	7147 (729)	7.3 (0.74), 41.44	Red	5.3 (0.209)	5.53	75 (2.95)	69.5 (2.736)	VX600ER/ SX600/ MM600 VT600 for U.S.A/Canada
90508-556A2	8314 (848)	8.5 (0.87), 48.72	Green	5.5 (0.217)	5.53	75 (2.95)	69.5 (2.736)	VT600 for Europe
90508-556A7	9460 (965)	10.21 (1.04), 58.24	Silver	5.5 (0.217)	4.86	75 (2.95)	69.5 (2.736)	

④ Secondary spring twist angle
90508-500B1 (brown) / 90508-536A9 (red) / 90508-556A2 (green) / 90508-556A7 (silver)

B Sheave / A Seat	0	3	6	9
1	10°	40°	70°	100°
2	20°	50°	80°	110°
3	30°	60°	90°	120°

⑤ Torque cam (secondary sheave spring seat)

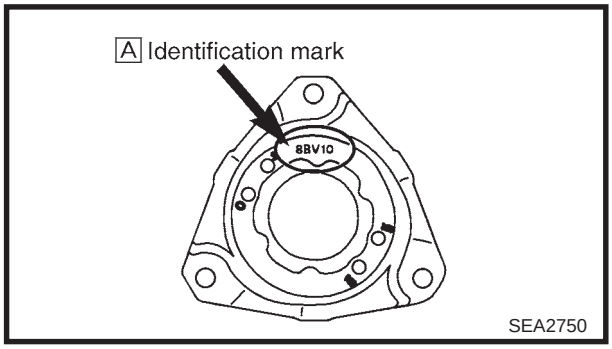

B Effects	C Part no.	D Cam angle	E Identification mark	F Standard
G Quicker upshifting during acceleration	8BV-17604-71	47°	8BV71	VX600ER/SX600
	8BV-17604-51	45°	8BV51	
	8BV-17604-31	43°	8BV31	MM600/VT600
	8BV-17604-11	41°	8BV11	
H Quicker backshifting under load	8BV-17604-91	39°	8BV91	

⑥ Primary sheave spring

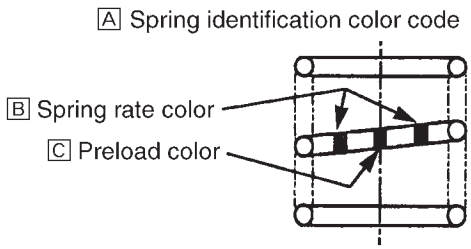

SEA2755

D Parts No.	E Spring rate N/mm (kg/mm)	F Preload N (kg)	G Color	H Wire gauge mm (in)	I Outside diameter mm (in)	J No. of coils	K Free length mm (in)	L Standard
90501-551L3	19.6 (2.00)	294 (30)	Blue-Pink-Blue	5.5 (0.216)	60 (2.362)	4.91	88.4 (3.48)	
90501-551L9	19.6 (2.00)	343 (35)	Blue-Silver-Blue	5.5 (0.216)	60 (2.362)	4.91	90.9 (3.58)	
90501-552L5	19.6 (2.00)	392 (40)	Blue-Green-Blue	5.5 (0.216)	60 (2.362)	4.91	93.4 (3.68)	
90501-581L5	24.5 (2.50)	294 (30)	Yellow-Pink-Yellow	5.8 (0.228)	60 (2.362)	4.92	85.4 (3.36)	
90501-581L6	27.0 (2.75)	294 (30)	Green-Pink-Green	5.8 (0.228)	60 (2.362)	4.66	84.3 (3.32)	
90501-582L1	24.5 (2.50)	343 (35)	Yellow-Gold-Yellow	5.8 (0.228)	60 (2.362)	4.92	87.4 (3.44)	
90501-582L2	27.0 (2.75)	343 (35)	Green-Silver-Green	5.8 (0.228)	60 (2.362)	4.66	87.4 (3.44)	VT600 for Europe
90501-582L6	22.1 (2.25)	392 (40)	White-Green-White	5.8 (0.228)	60 (2.362)	5.25	91.2 (3.59)	
90501-582L7	24.5 (2.50)	392 (40)	Yellow-Green-Yellow	5.8 (0.228)	60 (2.362)	4.92	89.4 (3.52)	VX600ER/SX600
90501-583L0	19.6 (2.00)	441 (45)	Blue-White-Blue	5.8 (0.228)	60 (2.362)	5.65	95.9 (3.78)	
90501-583L1	22.1 (2.25)	441 (45)	White-White-White	5.8 (0.228)	60 (2.362)	5.25	93.4 (3.68)	
90501-583L4	22.1 (2.25)	343 (35)	White-Silver-White	5.8 (0.228)	60 (2.362)	5.25	89.0 (3.50)	
90501-583L5	22.1 (2.25)	294 (30)	White-Pink-White	5.8 (0.228)	60 (2.362)	5.25	86.7 (3.41)	
90501-601L7	29.4 (3.00)	294 (30)	Pink-Pink-Pink	6.0 (0.236)	60 (2.362)	4.82	83.4 (3.28)	
90501-601L8	31.9 (3.25)	294 (30)	Orange-Pink-Orange	6.0 (0.236)	60 (2.362)	4.60	82.6 (3.25)	
90501-602L3	29.4 (3.00)	343 (35)	Pink-Silver-Pink	6.0 (0.236)	60 (2.362)	4.82	85.1 (3.35)	
90501-602L8	27.0 (2.75)	392 (40)	Green-Green-Green	6.0 (0.236)	60 (2.362)	5.08	87.9 (3.46)	
90501-602L9	29.4 (3.00)	392 (40)	Pink-Green-Pink	6.0 (0.236)	60 (2.362)	4.82	86.7 (3.41)	VT600 for U.S.A/ Canada
90501-603L2	24.5 (2.50)	441 (45)	Yellow-White-Yellow	6.0 (0.236)	60 (2.362)	5.39	91.4 (3.60)	MM600
90501-603L3	27.0 (2.75)	441 (45)	Green-White-Green	6.0 (0.236)	60 (2.362)	5.08	89.8 (3.54)	
90501-624L8	31.9 (3.25)	343 (35)	Orange-Silver-Orange	6.2 (0.244)	60 (2.362)	5.00	84.2 (3.31)	

⑦ Clutch weights

	A Standard
8CH-17605-10 35.32 g 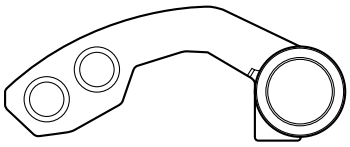 SEA2760	
8CR-17605-10 38.09 g 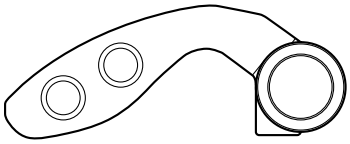 SEA2765	
8DG-17605-00 34.30 g  SEA2770	VX600ER/ SX600/ MM600/ VT600
8DJ-17605-00 37.77 g 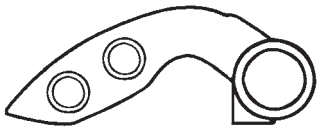 SEA2775	
8DN-17605-20 42.09 g  SEA2780	
8EK-17605-00 39.00 g 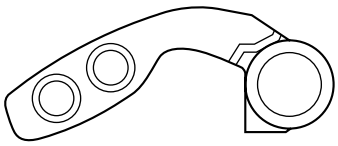 SEA2785	

⑧ Rollers

A ROLLER with BUSHING PART NUMBER	B OUTSIDE DIAMETER	C BUSHING TYPE (P/N) COLLAR OUTSIDE DIAMETER (P/N)	D IDENTIFICATION MARK (Width)	E Standard	F EFFECTS
8CR-17624-00	14.5 mm (0.57 in)	Duralon 90380-09245 9 mm (0.4 in) 90387-0514U	G Grooved & Machined 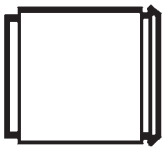 14.6 mm SEA2790	SX600/ VT600	K Increased force
8CR-17624-10	15.0 mm (0.59 in)	Duralon 90380-09245 9 mm (0.4 in) 90387-0514U	H Grooved 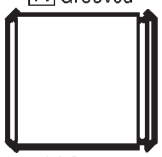 14.6 mm SEA2795	VX600ER	
8CR-17624-20	15.6 mm (0.61 in)	Duralon 90380-09245 9 mm (0.4 in) 90387-0514U	I No Mark 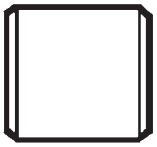 14.6 mm SEA2800	MM600	
8CR-17624-30	16.0 mm (0.63 in)	Duralon 90380-09245 9 mm (0.4 in) 90387-0514U	J Grooved & Grooved 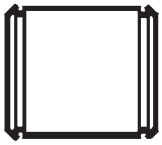 14.6 mm SEA2805		L Decreased force

HIGH ALTITUDE TUNING

To attain the best performance in high altitude conditions, carefully tune the snowmobile as outlined below.

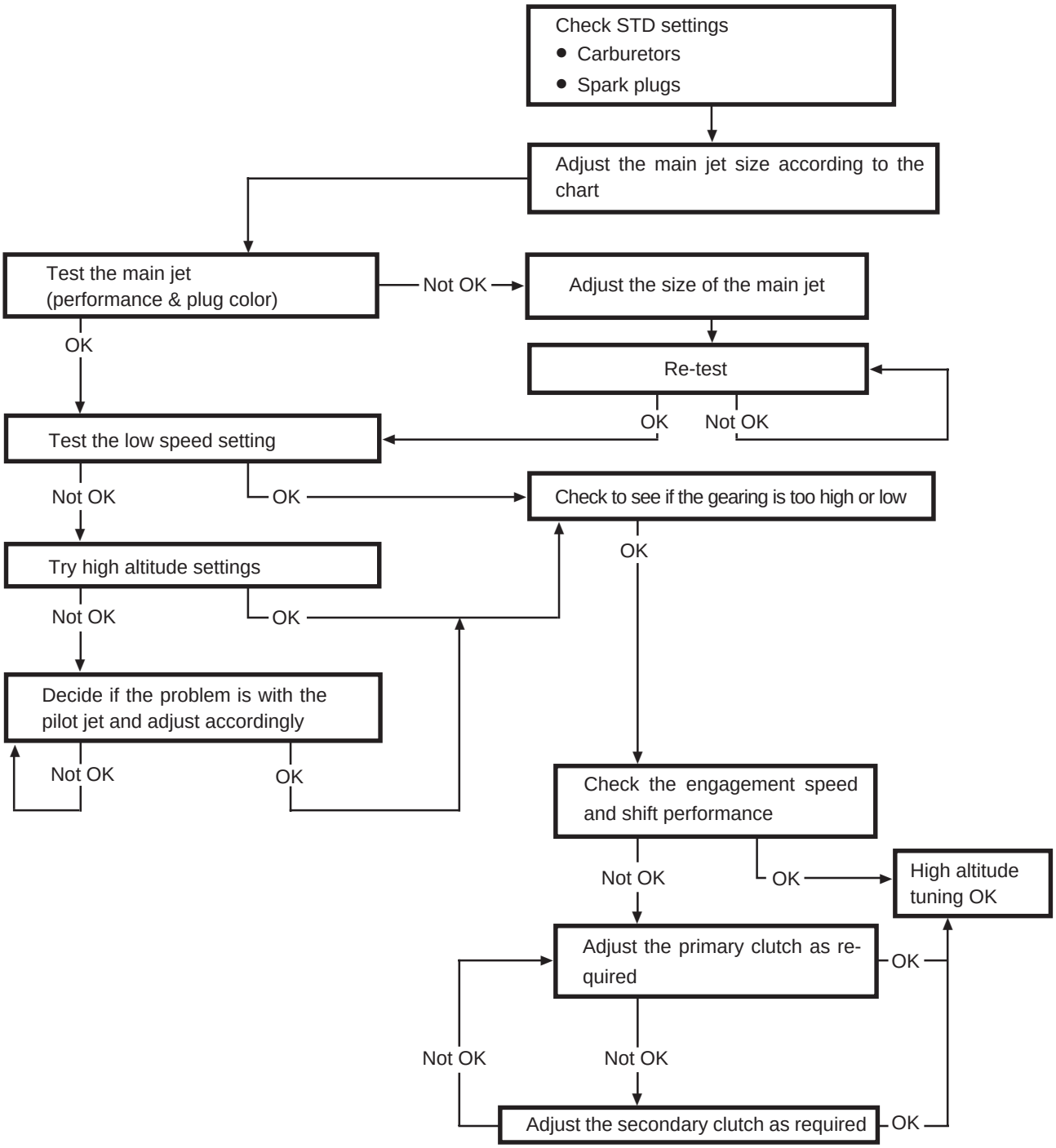

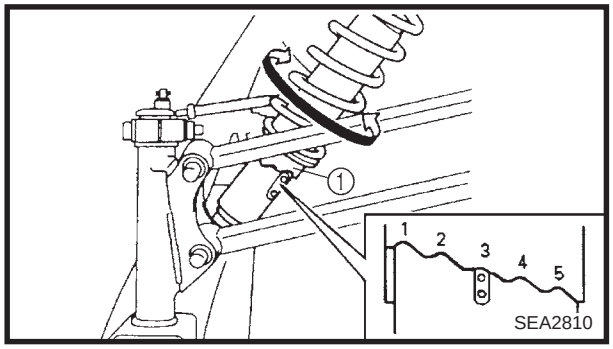

FRONT SUSPENSION

Spring preload (VX600ER/MM600/VT600)

1. Adjust:
   - Spring preload

Adjustment steps:

- Turn the adjusting ring ① to the proper position.

Spring adjuster position	1	2	3	4	5
Preload	Softer ←				→ Harder
Standard	VX600ER/VT600: 1 MM600: 3				

CAUTION:

Be sure that the left and right spring preload is the same.

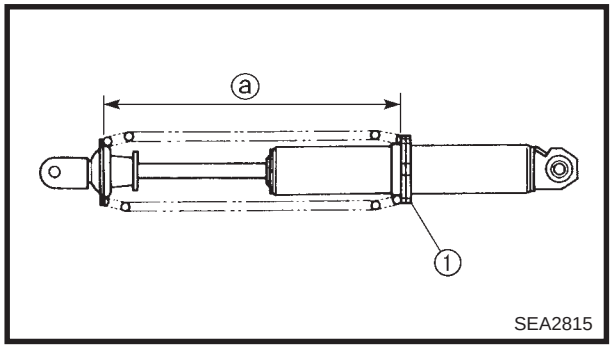

Spring preload (SX600)

1. Adjust:
   - Spring preload

Adjustment steps:

- Turn the spring seat ① in or out.

Spring seat distance	Standard Shorter ←		→ Longer
Preload	Harder ←		→ Softer
Length ⓐ	Min. 251.5 mm (9.90 in)	261.5 mm (10.30 in)	Max. 261.5 mm (10.30 in)

CAUTION:

Be sure that the left and right spring preloads are the same.

⚠ WARNING

This shock absorber contains highly pressurized nitrogen gas.
Do not tamper with or attempt to open the shock absorber assembly.
Do not subject the shock absorber assembly to flames or high heat, which could cause it to explode.

REAR SUSPENSION

Stopper band

1. Adjust:
   - Stopper band tension

CAUTION:

Make sure the left and right sides of the rear suspension stopper band are adjusted evenly.

NOTE:

This adjustment affects the handling characteristics of the machine.

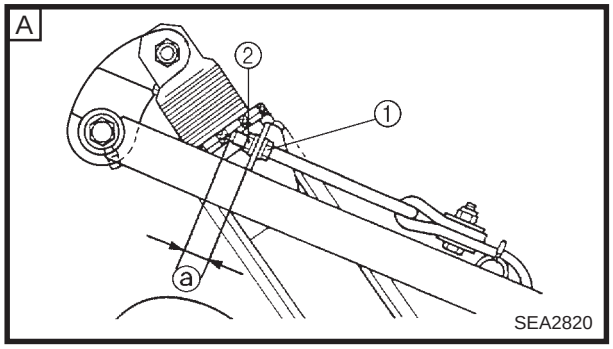

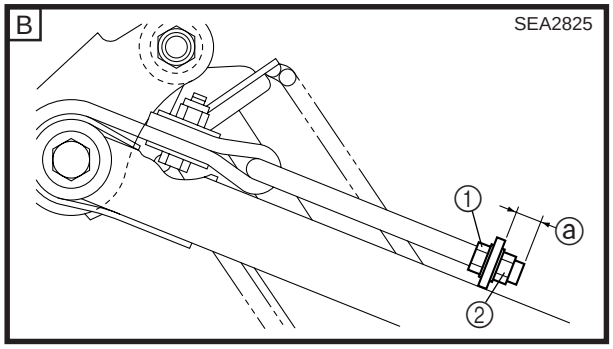

Adjustment steps:

- Loosen the locknut ①.
- Turn the adjusting nut ② in or out to adjust the stopper band tension.

Adjuster thread length ⓐ	**VX600ER:** **15 ± 0.5 mm (0.59 ± 0.02 in)** **SX600/VT600:** **25 ± 0.5 mm (0.98 ± 0.02 in)** **MM600:** **10 ± 0.5 mm (0.39 ± 0.02 in)** **Longer (Maximum)**	**Shorter (Minimum)**
Effects	**More weight on skis; Less weight transfer**	**Less weight on skis; More weight transfer**

- Tighten the locknut.

	**Locknut:** **16 Nm (1.6 m · kg, 11 ft · lb)**

A VX600ER/SX600/VT600
B MM600

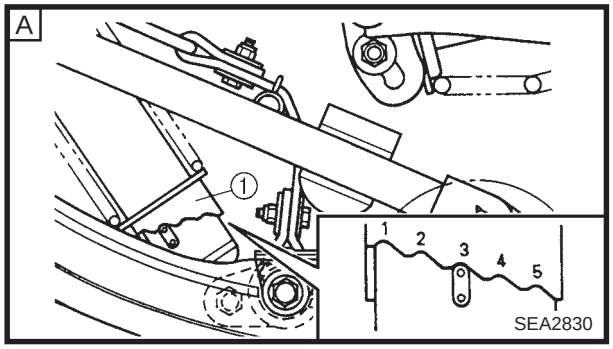

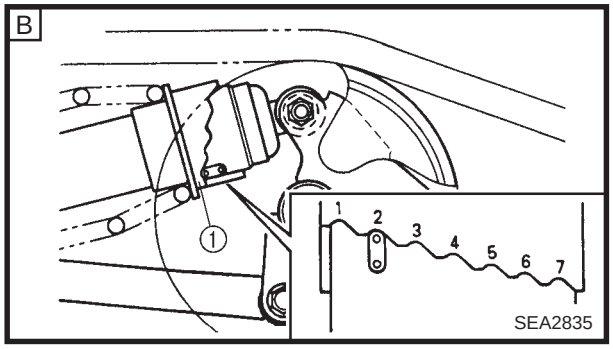

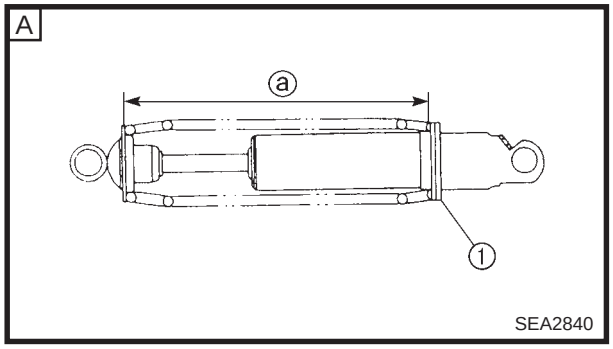

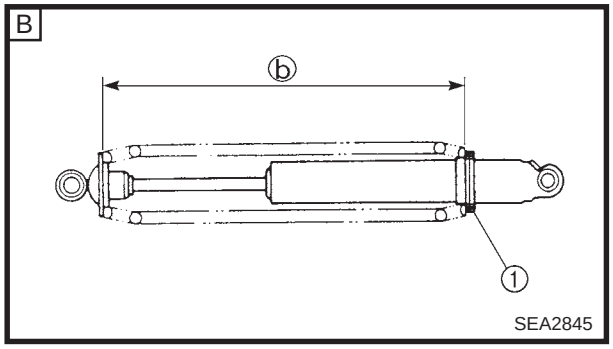

Spring preload (VX600ER/MM600/VT600)

1. Adjust:
   - Spring preload

Adjustment steps:

- Turn the adjusting ring ① to the proper position.

Spring adjuster position	1	2	3	4	5
Preload	Softer ←				→ Harder
Ⓐ Front Standard	VX600ER/MM600/VT600: 3				

Spring adjuster position	1	2	3	4	5	6	7
Preload	Softer ←						→ Harder
Ⓑ Rear Standard	VX600ER: 2 MM600/VT600: 4						

Spring preload (SX600)

1. Adjust:
   - Spring preload

Adjustment steps:

- Turn the spring seat ① in or out.

Spring seat distance	Standard Shorter ←		→ Longer
Preload	Harder ←		→ Softer
Ⓐ Front: length ⓐ	Min. 203 mm (7.99 in)	213 mm (8.39 in)	Max. 213 mm (8.39 in)
Ⓑ Rear: length ⓑ	Min. 358.5 mm (14.11 in)	368.5 mm (14.51 in)	Max. 378.5 mm (14.90 in)

⚠ WARNING

This shock absorber contains highly pressurized nitrogen gas.
Do not tamper with or attempt to open the shock absorber assembly.
Do not subject the shock absorber assembly to flames or high heat, which could cause it to explode.

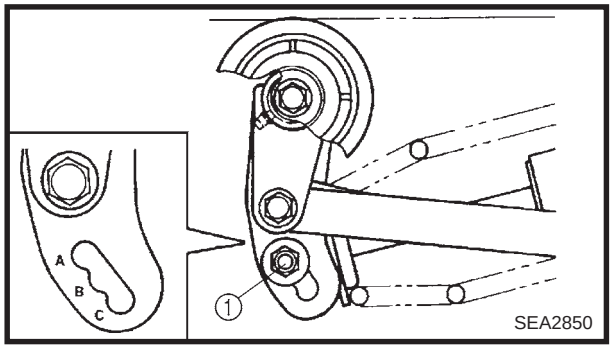

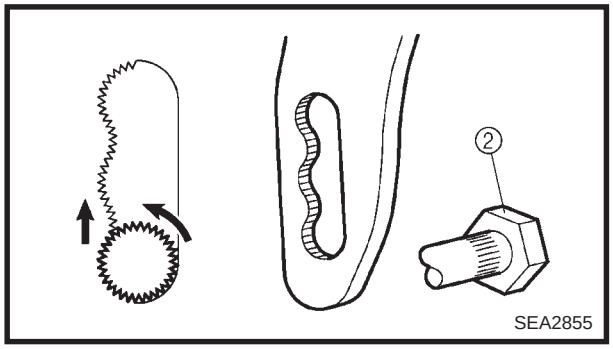

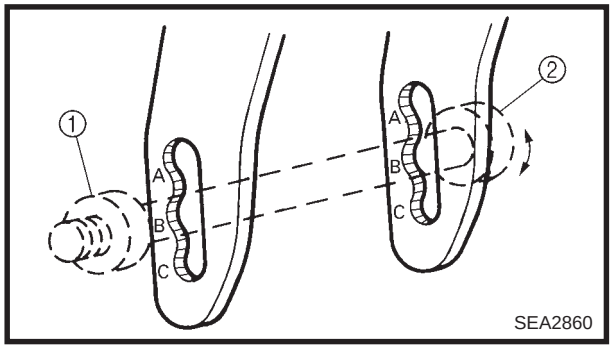

Rear suspension-full rate

1. Adjust:
   - Full rate adjuster

Adjustment steps:

Installation position	A	B	C
Spring rate and damping	Soft	Medium	Hard
Standard	B		

NOTE:

Be sure to make this adjustment when there is no load (rider or cargo) on the snowmobile.

- Loosen the nut ① 1/2 or 3/4 turns, while holding the adjusting bolt ② securely with a wrench so it does not move.

CAUTION:

Never allow the adjusting bolt ② to move while loosening the nut.

- Turn the adjusting bolt ② to the desired position.

CAUTION:

Be sure the adjusting bolt ends are set at the same position on each side.

- While holding the adjusting bolt securely, tighten the nut ①.

	**Nut (shock absorber):** **49 Nm (4.9 m · kg, 35 ft · lb)**

CAUTION:

Never allow the adjusting bolt to move while tightening the nut.

- This model has a “Easy adjust” system for the Full rate adjuster. The bolt has teeth on it. So when the bolt is turned, it rides up and down the bracket.

NOTE:

- The nut has to be loosen first, while the bolt is held in place with a wrench.
- Then the bolt can be turned to adjust the shock position up or down.
- If the bolt is turned with the nut tight, it is possible to strip the teeth off the bolt.

Rear suspension position (MM600)

1. Adjust:
   - Rear suspension position

NOTE:

Select the rear suspension position according to the snow conditions: ⓐ standard; ⓑ deep new snow.

Bolt (slide rail suspension):
72 Nm (7.2 m · kg, 52 ft · lb)
LOCTITE®

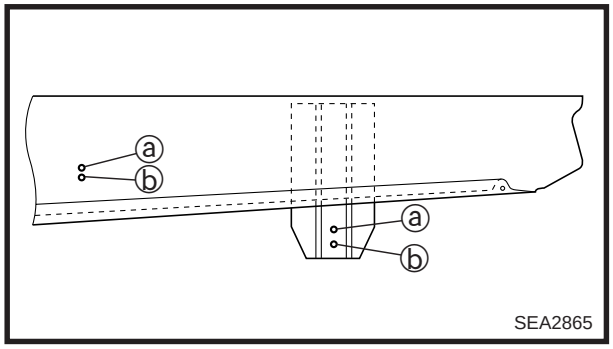

CHASSIS

STEERING

VX600ER/SX600/VT600

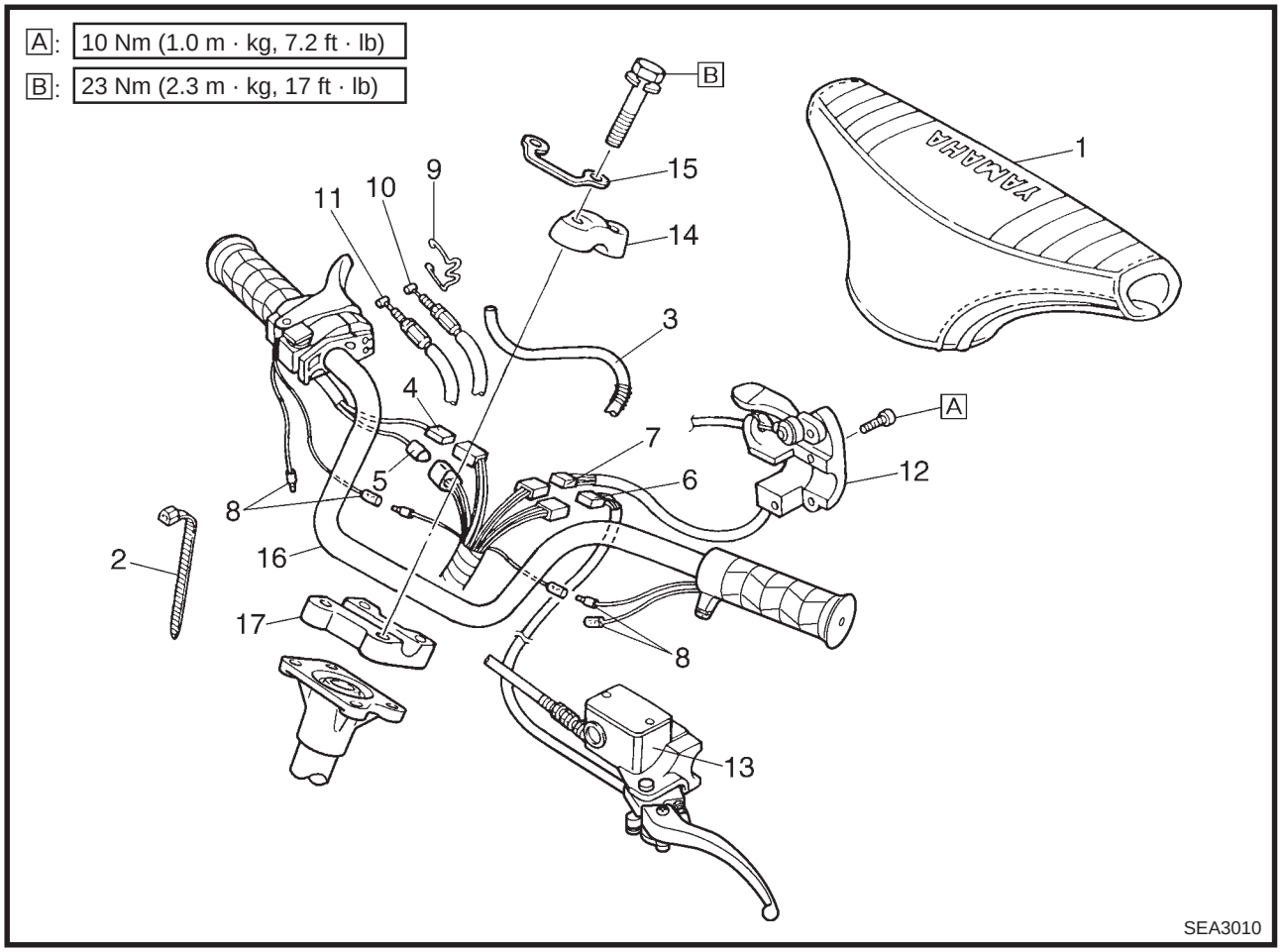

Order	Job name/Part name	Q'ty	Remarks
	Handlebar removal		Remove the parts in the order listed below.
1	Handlebar cover	1	
2	Plastic band	3	
3	Oil tank breather hose	1	
4	Thumb warmer coupler	1	Disconnect.
5	Engine stop switch coupler	1	Disconnect.
6	Brake light switch coupler	1	Disconnect.
7	Headlight beam switch coupler	1	Disconnect.
8	Grip warmer lead	4	Disconnect.
9	Throttle cable holder	1	
10	Throttle cable	1	
11	Oil pump cable	1	
12	Brake lever holder	1	
13	Master cylinder assembly	1	**NOTE:** After installing all parts, refer to "CABLE ROUTING" in CHAPTER 9, to check the cable, lead and hose routings.
14	Handlebar holder (upper)	2	
15	Cable holder	1	
16	Handlebar	1	
17	Handlebar holder (lower)	1	For installation, reverse the removal procedure.

MM600

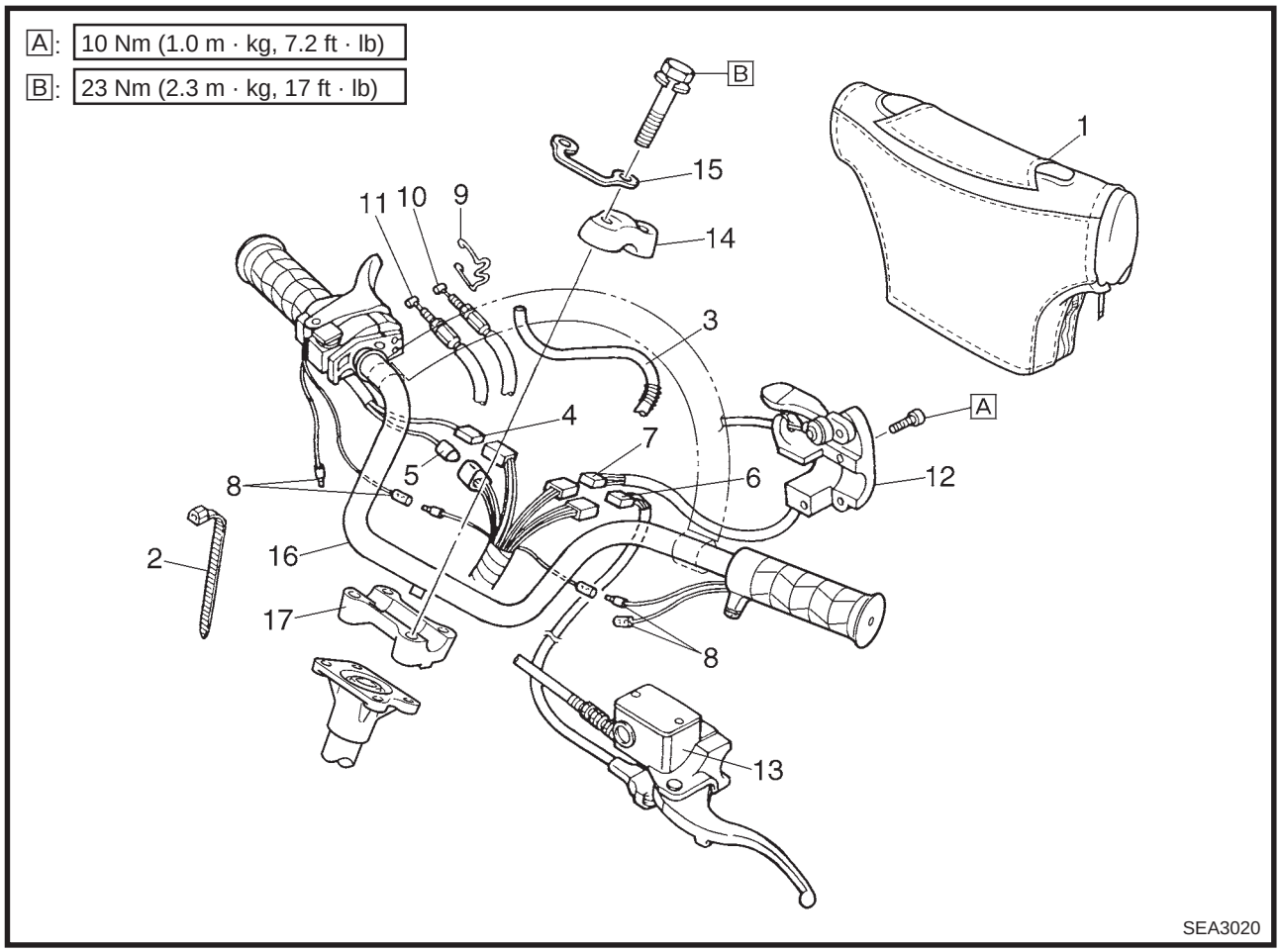

Order	Job name/Part name	Q'ty	Remarks
	Handlebar removal		Remove the parts in the order listed below.
1	Handlebar cover	1	
2	Plastic band	3	
3	Oil tank breather hose	1	
4	Thumb warmer coupler	1	Disconnect.
5	Engine stop switch coupler	1	Disconnect.
6	Brake light switch coupler	1	Disconnect.
7	Headlight beam switch coupler	1	Disconnect.
8	Grip warmer lead	4	Disconnect.
9	Throttle cable holder	1	
10	Throttle cable	1	
11	Oil pump cable	1	
12	Brake lever holder	1	
13	Master cylinder assembly	1	**NOTE:**
14	Handlebar holder (upper)	2	After installing all parts, refer to "CABLE ROUTING" in CHAPTER 9, to check the cable, lead and hose routings.
15	Cable holder	1	
16	Handlebar	1	
17	Handlebar holder (lower)	1	For installation, reverse the removal procedure.

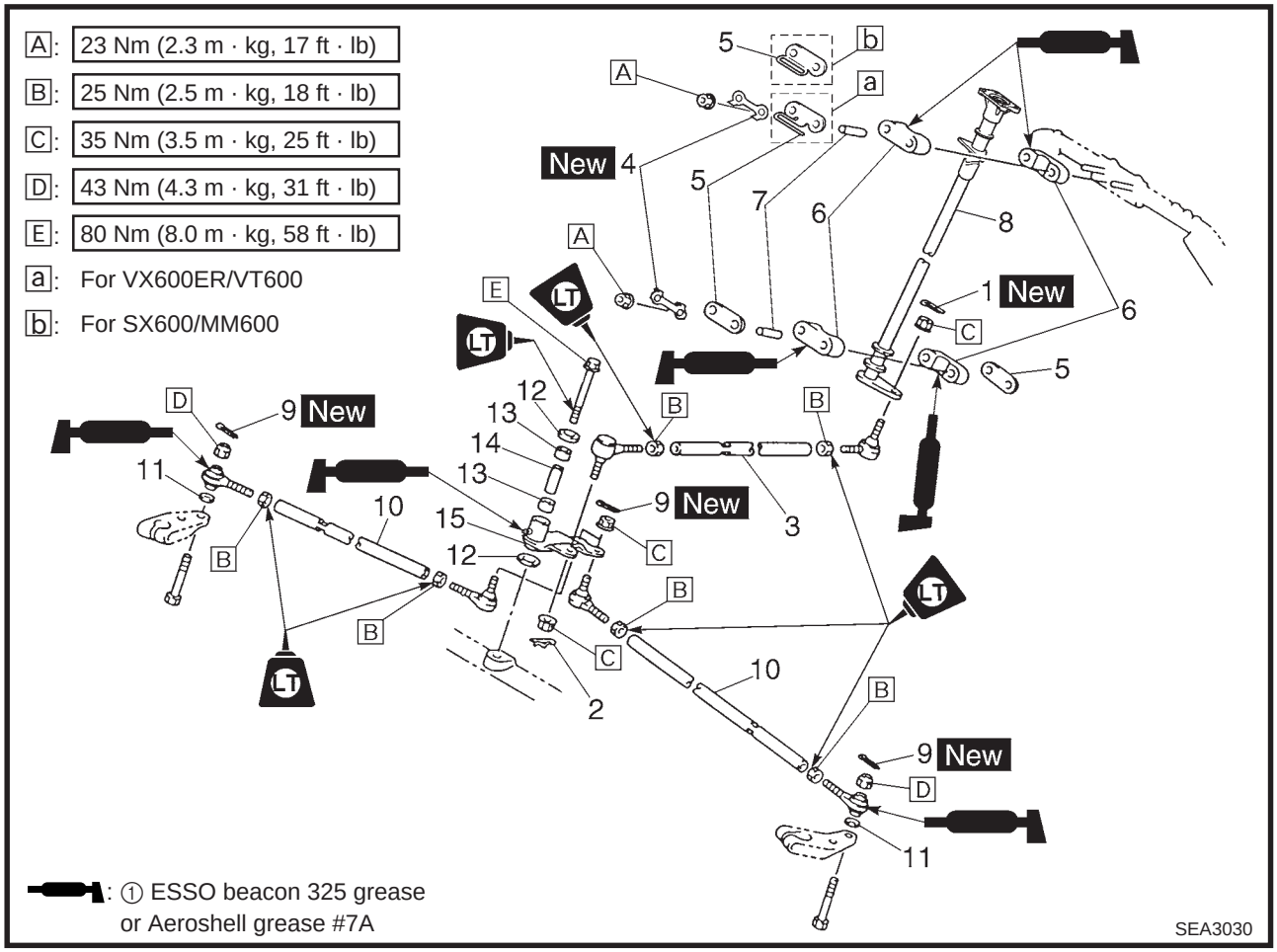

Order	Job name/Part name	Q'ty	Remarks
	Steering column and tie rod removal		Remove the parts in the order listed below.
	Engine assembly		Refer to "ENGINE ASSEMBLY" in CHAPTER 5.
	Handlebar		
1	Cotter pin	1	
2	Clip	1	
3	Relay rod	1	
4	Lock washer	2	
5	Bearing holder	3	
6	Bearing	4	
7	Collar	4	
8	Steering column	1	
9	Cotter pin	4	
10	Tie rod	2	
11	Washer	2	
12	Washer	2	
13	Bushing	2	
14	Collar	1	
15	Relay arm	1	
			For installation, reverse the removal procedure.

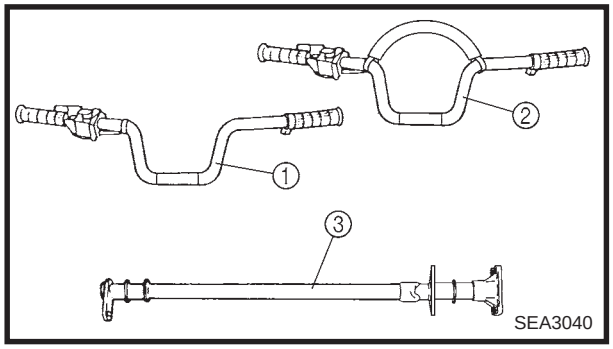

INSPECTION

1. Inspect:
   - Handlebar ① (VX600ER/SX600/VT600)
   - Handlebar ② (MM600)
   - Steering column ③
     Bends/cracks/damage → Replace.

⚠ WARNING

Do not attempt to straighten a bent column. This may dangerously weaken the column.

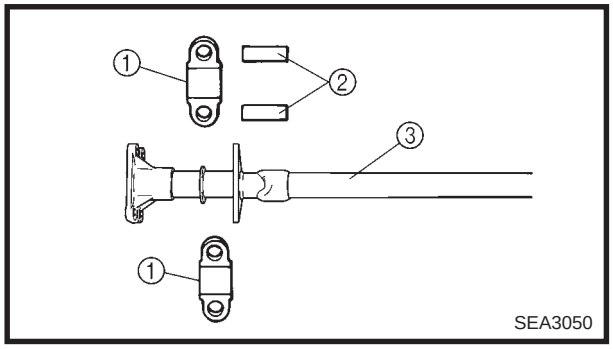

2. Inspect:
   - Bearings (steering column) ①
   - Collars ②
     Wear/damage → Replace.
   - Steering column ③ (bearing contact surfaces)
     Scratches/wear/damage → Replace.

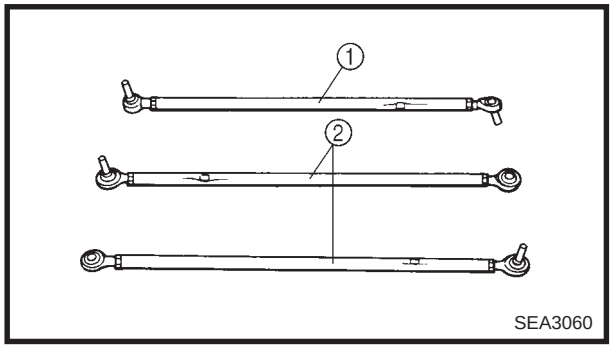

3. Inspect:
   - Relay rod ①
   - Tie rods ②
     Bends/cracks/damage → Replace.

⚠ WARNING

Do not attempt to straighten bent rods. This may dangerously weaken the rods.

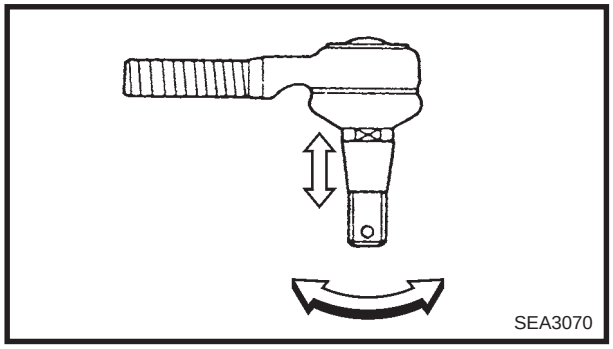

4. Check:
   - Rod end movement
     Rod end free play exists → Replace the rod end.
     Rod end turns roughly → Replace the rod end.

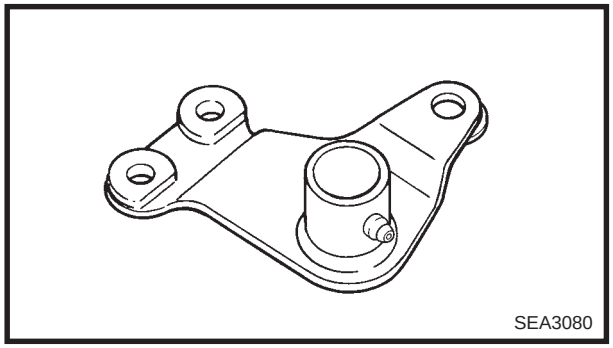

5. Inspect:
   - Relay arm
     Cracks/damage → Replace.

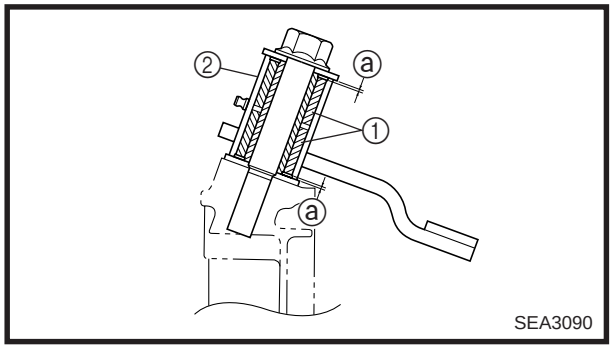

INSTALLATION

1. Install:
   - Bushings ①

NOTE:

Mount the bushing with clearance ⓐ to the end of the relay arm ②.

ⓐ Approx. 1 mm (0.04 in)

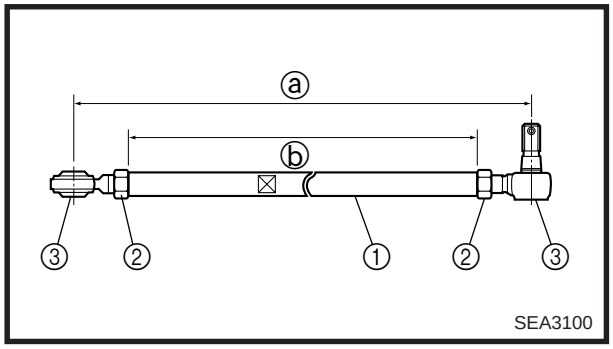

2. Install:
   - Tie rod ①
   - Locknut ②
   - Joints ③

A Tie rod part number	B Set length ⓐ	C Tie rod length ⓑ
8CR-23831-00 (VX600ER/ SX600/VT600)	517.2 mm (20.3622 in)	454.2 mm (17.8819 in)
8CS-23831-00 (MM600)	474.5 mm (18.6811 in)	411.5 mm (16.2008 in)

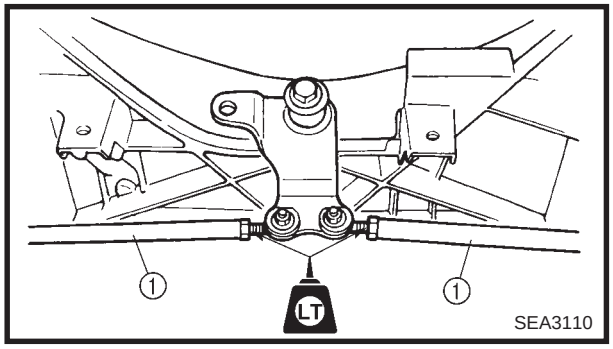

3. Install:
   - Tie rods ①

NOTE:

- Make sure that the indentation ⓐ on the tie rod faces out.
- The threads on both rod ends must be the same length.

CAUTION:

Always use new cotter pins.

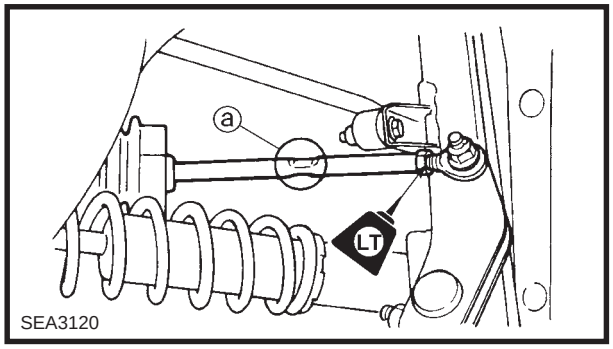

Locknut (tie rod):
25 Nm (2.5 m · kg, 18 ft · lb)
LOCTITE®
Nut (tie rod-relay arm):
35 Nm (3.5 m · kg, 25 ft · lb)
Nut (tie rod-steering arm):
43 Nm (4.3 m · kg, 31 ft · lb)

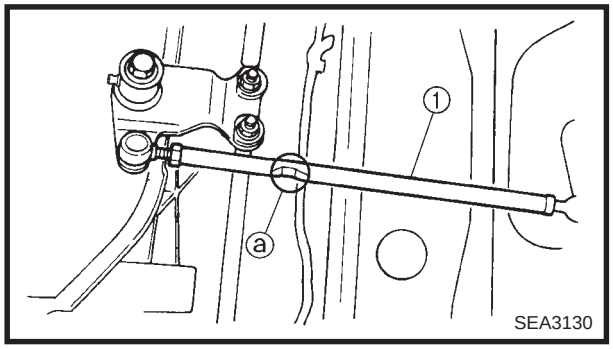

4. Install:
   - Relay rod ①

NOTE:

Make sure that the end of the relay rod with the indentation ⓐ is connected to the relay arm.

CAUTION:

Always use new cotter pins.

	Nut (relay rod): **35 Nm (3.5 m · kg, 25 ft · lb)**

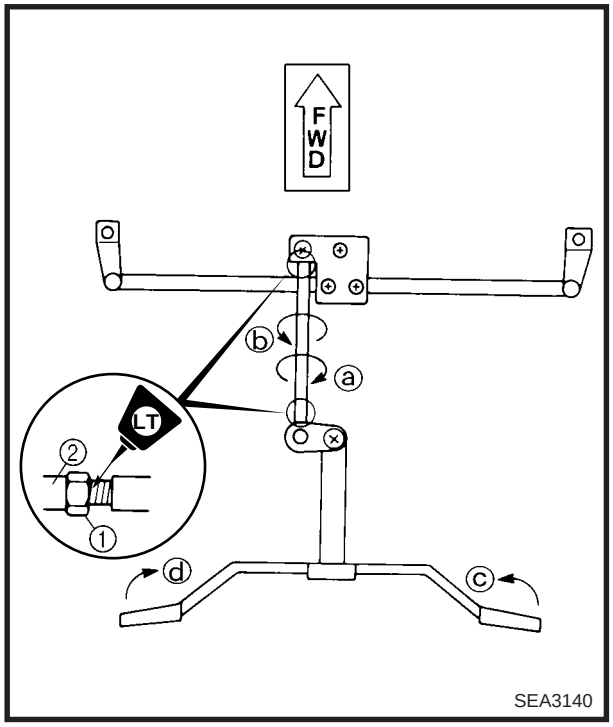

5. Adjust:
   - Skis

Adjustment steps:

- Temporarily install the handlebar.
- Hold the handlebar straight and check that the skis are at right angles to the handlebar.
- Loosen the locknuts (relay rod) ①.
- Position the skis parallel in the riding direction.
- With the skis in this position, turn the relay rod ② in either direction until the handlebars at right angles with respect to the direction of movement.

Turning the relay rod in direction ⓐ	**Turning the handlebar in direction ⓒ**
Turning the relay rod in direction ⓑ	**Turning the handlebar in direction ⓓ**

- Tighten the locknuts (relay rod) ①.

	Locknut (relay rod): **25 Nm (2.5 m · kg, 18 ft · lb)** **LOCTITE®**

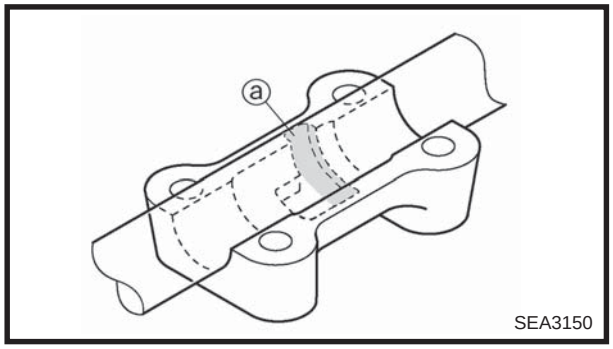

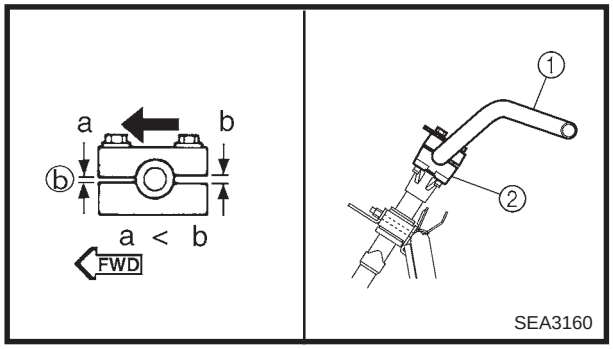

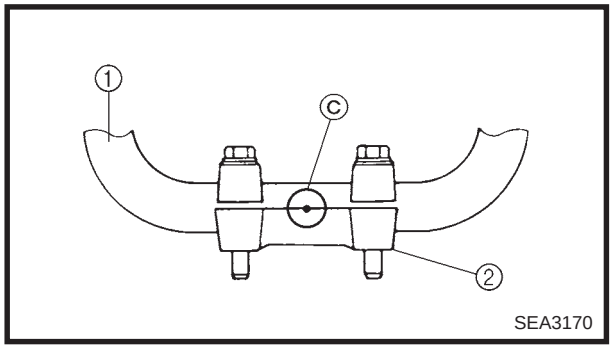

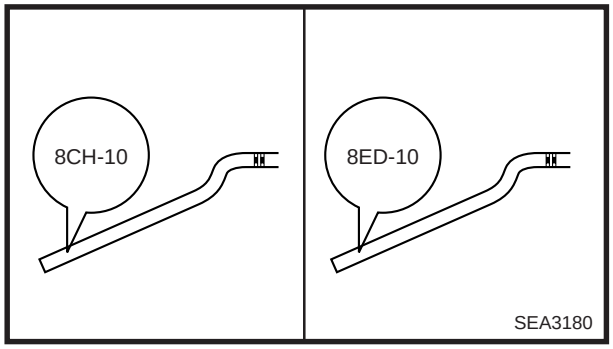

6. Install:
   - Handlebar

CAUTION:

- **For SX600/MM600:**
  Be sure the projection on the handlebar is not installed into the area ⓐ shown.
- **Be sure the side of the holder with the small gap ⓑ faces forward.**
- **Center the match mark ⓒ on the handlebar ① between the lower handlebar holders ②.**

	Bolt (handlebar holder): **23 Nm (2.3 m · kg, 17 ft · lb)**

CAUTION:

- **First tighten the bolts on the front side of the handlebar holder, and then tighten the bolts on the rear side.**
- **For SX600/MM600:**
  The handlebar for the SX600 (8EA4) has "8CH-10" stamped on one end for identification. The handlebar for the MM600 (8EJ3) has "8ED-10" stamped on one end. Since these handlebars are specifically designed for the SX600 (8EA4) and MM600 (8EJ3), do not use them on any future models.

SKI

VX600ER/VT600

A: 11 Nm (1.1 m · kg, 8.0 ft · lb)
B: 17 Nm (1.7 m · kg, 12 ft · lb)
C: 21 Nm (2.1 m · kg, 15 ft · lb)
D: 48 Nm (4.8 m · kg, 35 ft · lb)
: ① ESSO beacon 325 grease or Aeroshell grease #7A

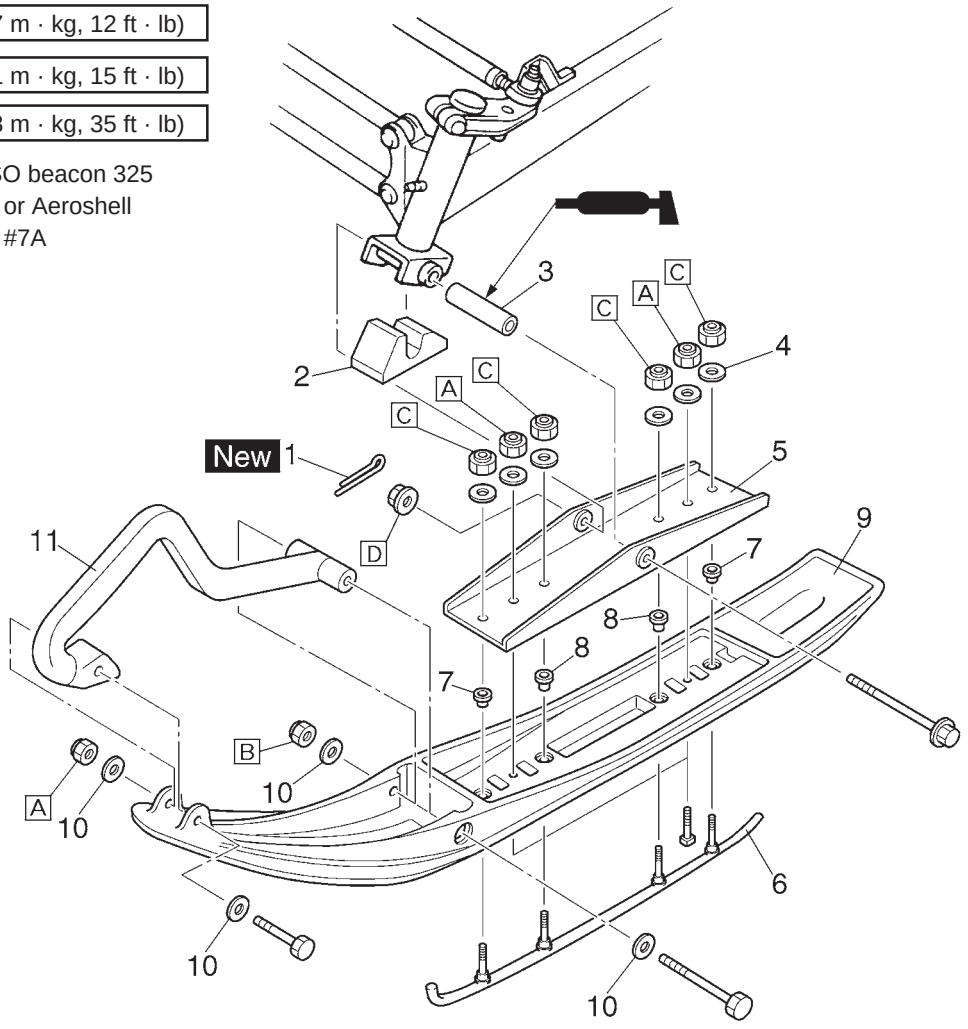

SEA3190

Order	Job name/Part name	Q'ty	Remarks
	Ski removal		Remove the parts in the order listed below.
1	Cotter pin	1	
2	Ski stopper	1	
3	Collar	1	
4	Washer	6	
5	Ski column lower bracket	1	
6	Ski runner	1	
7	Collar	2	Color : Black
8	Collar	2	Color : Gold
9	Ski	1	
10	Washer	4	
11	Ski handle	1	
			For installation, reverse the removal procedure.

SX600/MM600

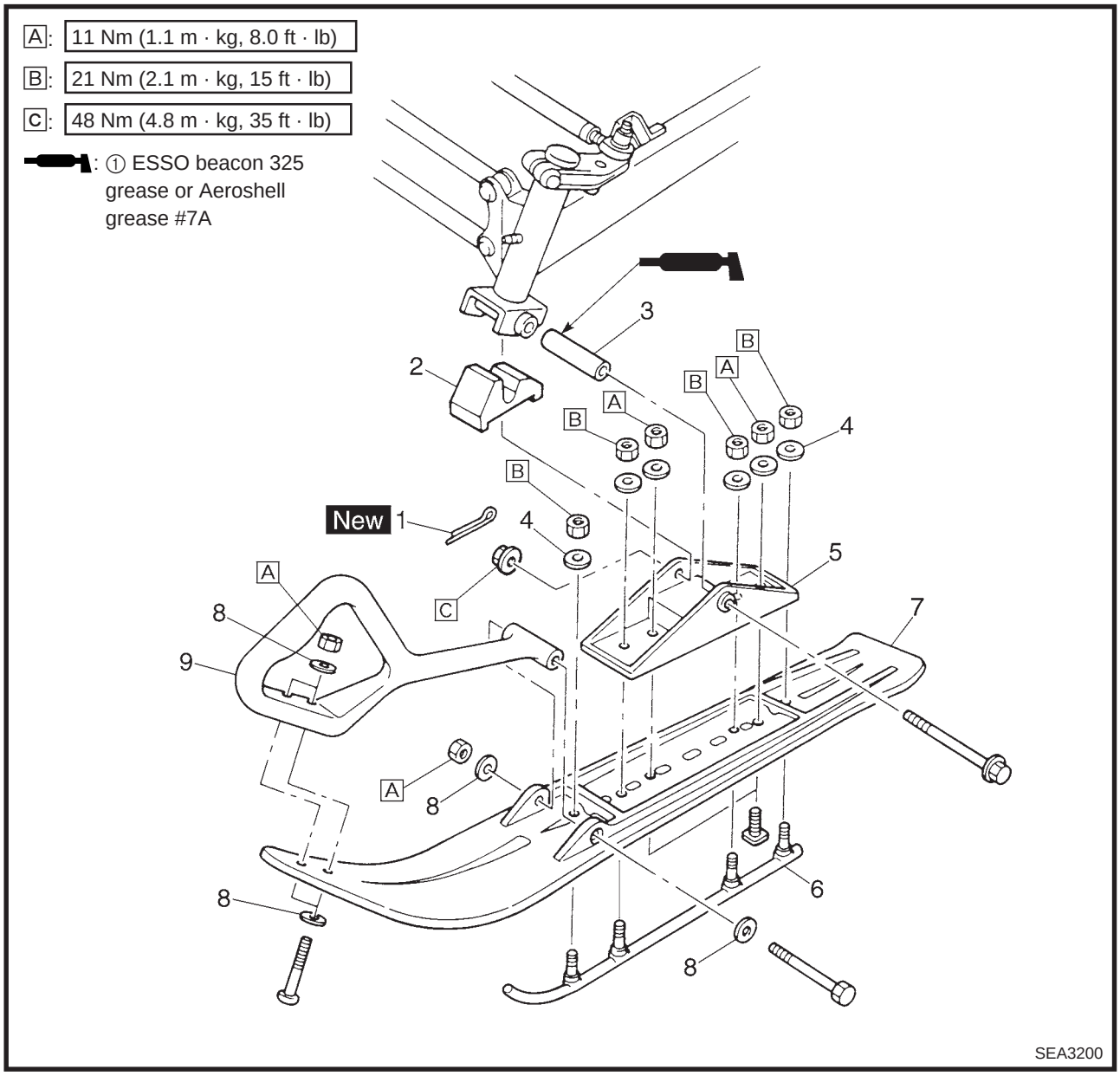

Order	Job name/Part name	Q'ty	Remarks
	Ski removal		Remove the parts in the order listed below.
1	Cotter pin	1	
2	Ski stopper	1	
3	Collar	1	
4	Washer	6	
5	Ski column lower bracket	1	
6	Ski runner	1	
7	Ski	1	
8	Washer	6	
9	Ski handle	1	
			For installation, reverse the removal procedure.

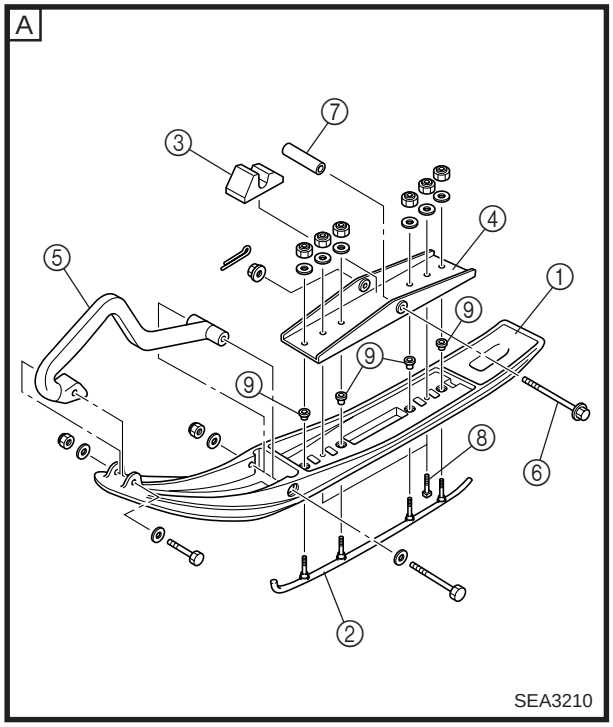

INSPECTION

1. Inspect:
   - Ski ①
   - Ski runner ②
   - Ski stopper ③
   - Ski column lower bracket ④
   - Ski handle ⑤
     Wear/cracks/damage → Replace.
   - Mounting bolt ⑥
   - Collar ⑦
   - Bolts ⑧
   - Collars ⑨
     Wear/damage → Replace.

A VX600ER/VT600
B SX600/MM600

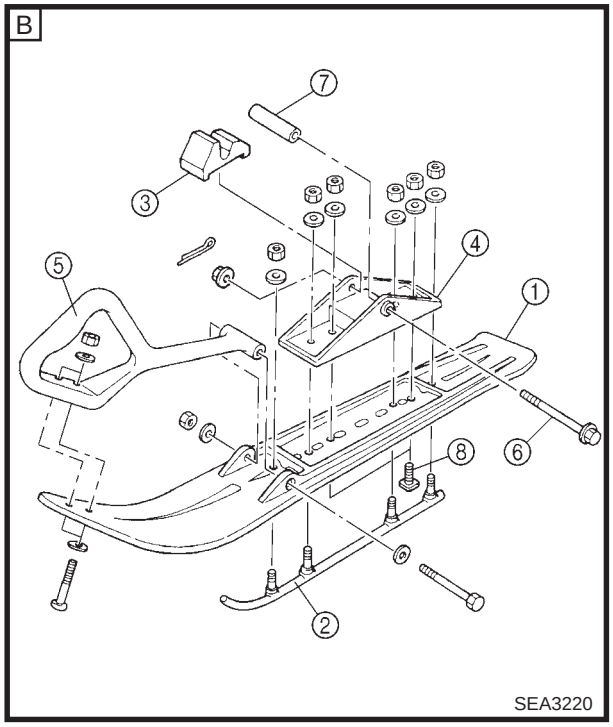

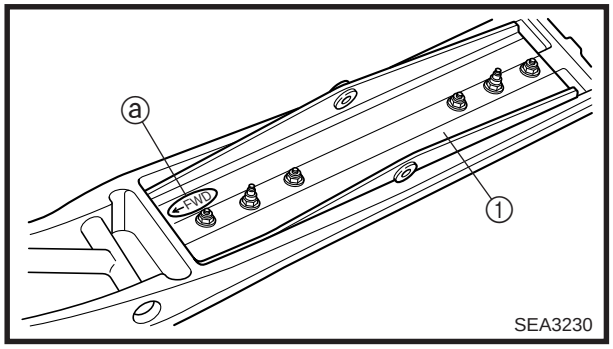

INSTALLATION (VX600ER/VT600)

1. Install:
   - Ski column lower bracket ①

NOTE:

Be sure to install the ski column lower bracket with the arrow mark ⓐ pointing forward the tip of the ski.

FRONT SUSPENSION

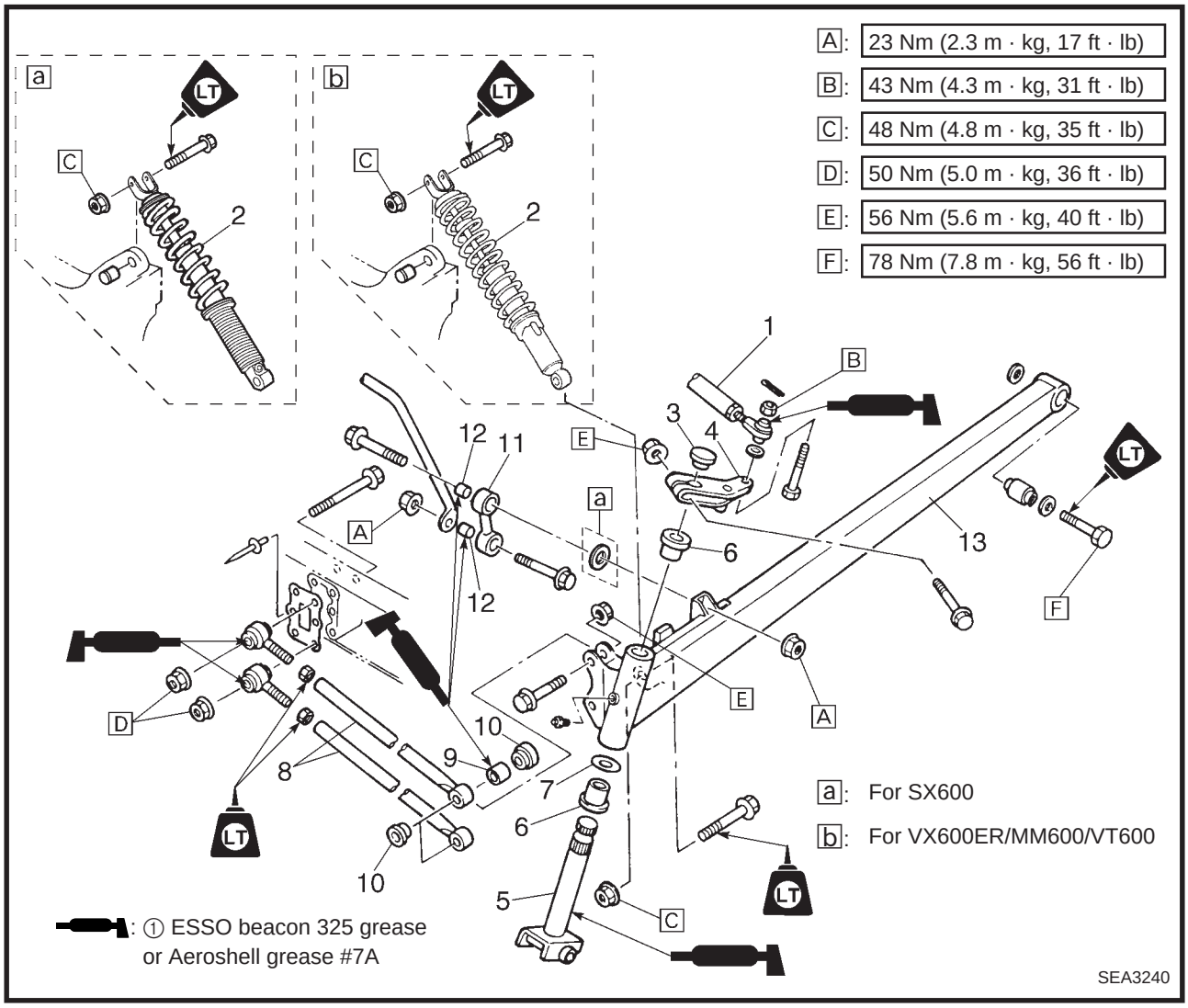

Order	Job name/Part name	Q'ty	Remarks
	Front suspension removal		Remove the parts in the order listed below.
	Ski		Refer to "SKI".
1	Tie rod	1	
2	Shock absorber	1	
3	Cap	1	
4	Steering arm	1	
5	Ski column	1	
6	Bushing	2	
7	Washer	1	
8	Control rod	2	
9	Collar	2	
10	Bushing	4	
11	Connecting rod	1	
12	Collar	2	
13	Front arm	1	
			For installation, reverse the removal procedure.

HANDLING NOTES (SX600)

⚠ WARNING

This shock absorber contains highly compressed nitrogen gas. Before handling the shock absorber read and make sure that you understand the following information. The manufacturer cannot be held responsible for property damage or personal injury that may result from improper handling.

- **Do not tamper or attempt to open the gas chamber.**
- **Do not subject the shock absorber to flames or any other source of high heat. This may cause the unit to explode due to excessive gas pressure.**
- **Do not deform or damage the gas chamber in any way. Gas chamber damage will result in poor damping performance.**

INSPECTION

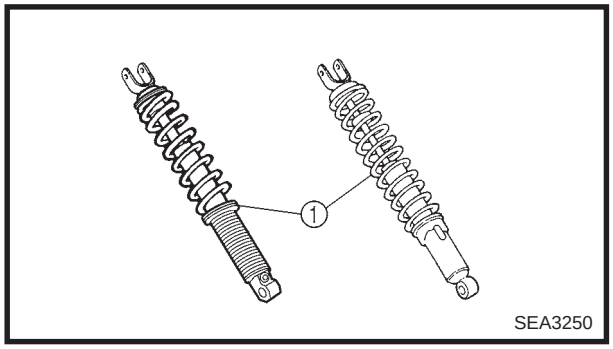

1. Inspect:
   - Shock absorber ①
     Oil (gas) leaks/bends/damage → Replace.

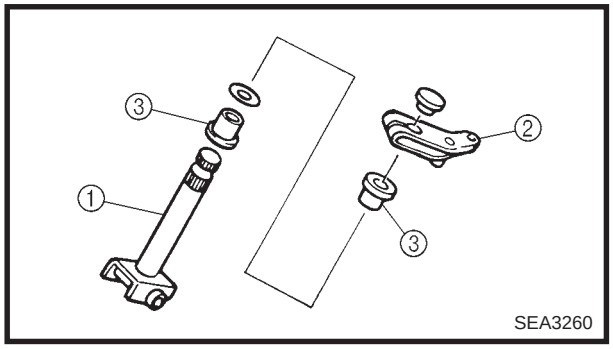

2. Inspect:
   - Ski column ①
   - Steering arm ②
     Cracks/bends/damage → Replace.
   - Bushing ③
     Wear/scratches/damage → Replace.

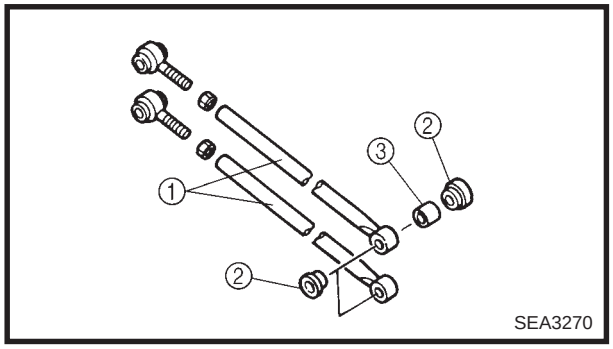

3. Inspect:
   - Control rod ①
     Cracks/bends/damage → Replace.
   - Bushing ②
   - Collar ③
     Wear/scratches/damage → Replace.

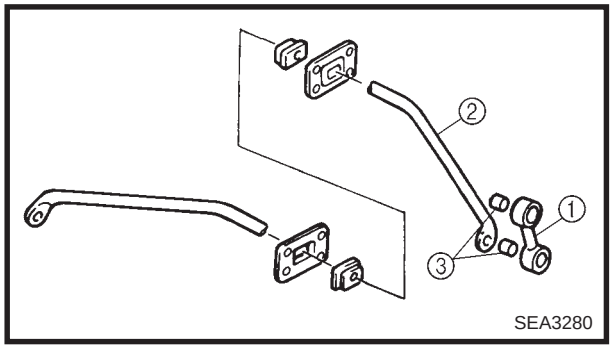

4. Inspect:
   - Connecting rod ①
   - Stabilizer ②
     Cracks/bends/damage → Replace.
   - Collar ③
     Wear/scratches/damage → Replace.

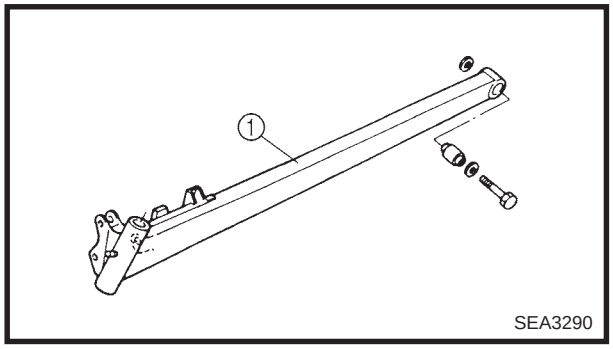

5. Inspect:
   - Front arm ①
     Cracks/bends/damage → Replace.

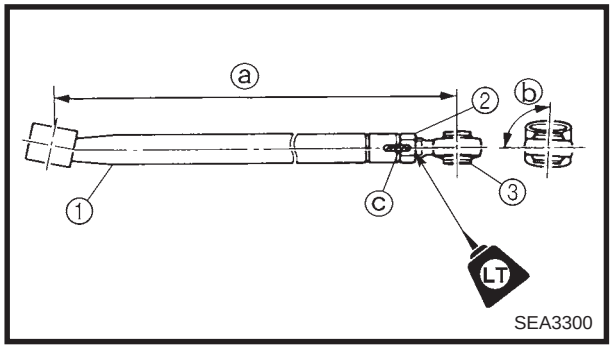

INSTALLATION

1. Install:
   - Control rod ①
   - Nut ②
   - Joint ③

	A Left hand		
	B Set length ⓐ	C Set angle ⓑ	G color ⓒ
E Upper (VX600ER/SX600/VT600)	475.5 ± 0.5 mm (18.7204 ± 0.0197 in)	93 ± 1°	Blue
F Lower (VX600ER/SX600/VT600)	472.6 ± 0.5 mm (18.6062 ± 0.0197 in)	93 ± 1°	
E Upper (MM600)	429.7 ± 0.5 mm (16.9173 ± 0.0197 in)	93 ± 1°	Green
F Lower (MM600)	428.7 ± 0.5 mm (16.8779 ± 0.0197 in)	93 ± 1°	

	D Right hand		
	B Set length ⓐ	C Set angle ⓑ	G color ⓒ
E Upper (VX600ER/SX600/VT600)	475.5 ± 0.5 mm (18.7204 ± 0.0197 in)	87 ± 1°	Yellow
F Lower (VX600ER/SX600/VT600)	472.6 ± 0.5 mm (18.6062 ± 0.0197 in)	87 ± 1°	
E Upper (MM600)	429.7 ± 0.5 mm (16.9173 ± 0.0197 in)	87 ± 1°	White
F Lower (MM600)	428.7 ± 0.5 mm (16.8779 ± 0.0197 in)	87 ± 1°	

Locknut (control rod):
12 mm = 56 Nm (5.6 m · kg, 40 ft · lb)
14 mm = 73 Nm (7.3 m · kg, 53 ft · lb)
LOCTITE®

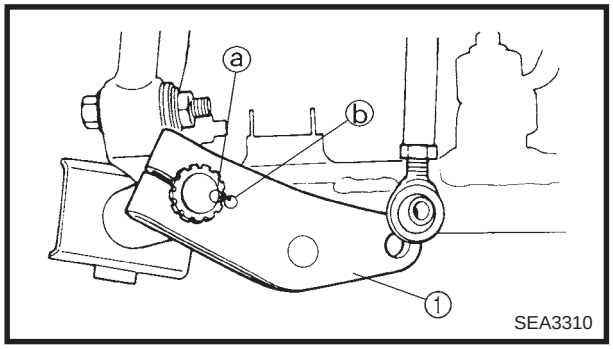

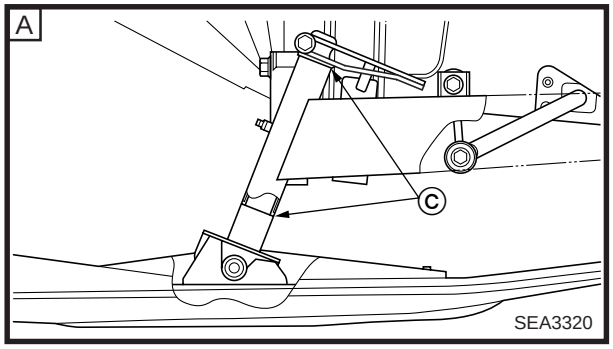

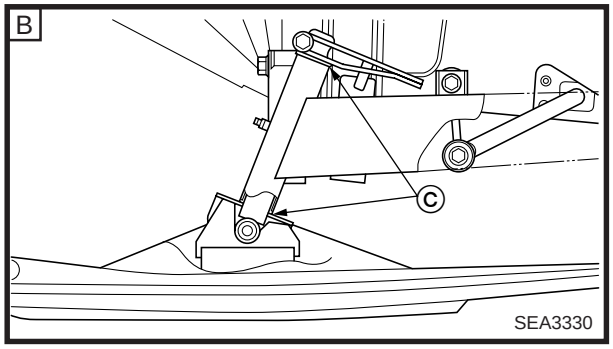

2. Install:
   - Steering arm ①

NOTE:

- Align the punch mark ⓐ on the ski column with the punch mark ⓑ on the steering arm.
- Install sections ⓒ without any gaps.

	Nut (steering arm): **56 Nm (5.6 m · kg, 40 ft · lb)**

A VX600ER/VT600
B SX600/MM600

Ski spindle camber

Place the unit on a level surface and check the ski spindle camber. DO NOT elevate the front end.

① Using an angle finder, be sure that the unit sits parallel with the floor. Place the angle finder up against the flat aluminum part of the belly pan.

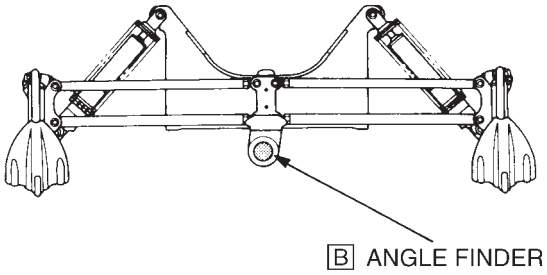

SEA3340

A USE AN ANGLE FINDER TO CHECK THAT THE UNIT IS LEVEL.

	Angle finder: **YS-42422**

② Place the angle finder up against the vertical flat surface on the trailing arm just behind the spindle weld and check the spindle camber.

Ski spindle camber:
–0.5° to +0.5°

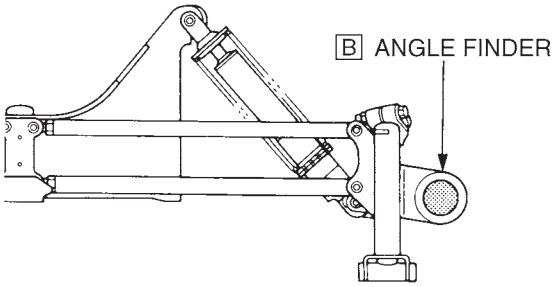

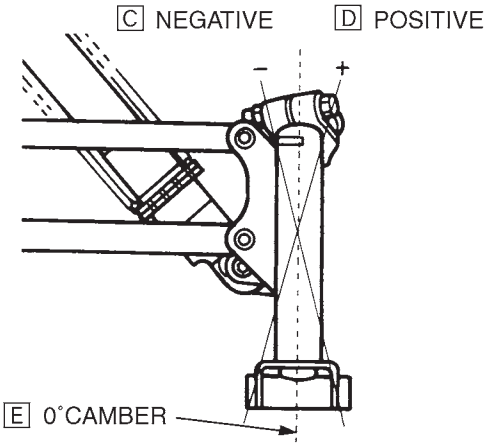

SEA3350

③ To adjust the camber, loosen the lower radius rod ball joint locknut and remove the bolt securing the radius rod to the trailing arm. Turn the rod in or out as necessary until the proper camber angle is obtained.

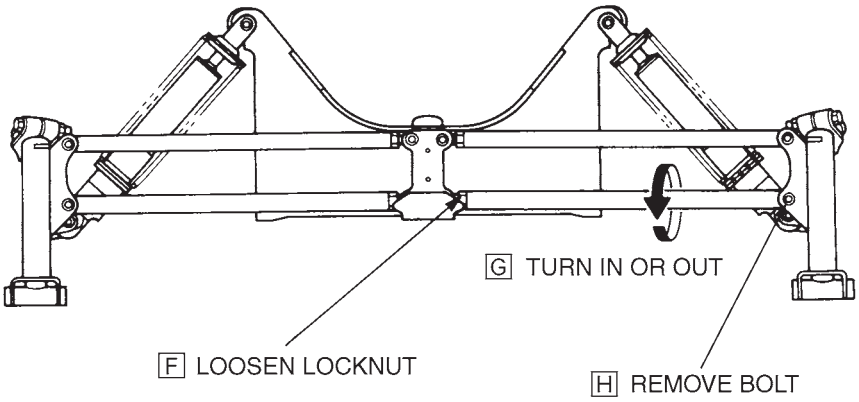

SEA3360

④ Install the radius rod onto the trailing arm and tighten the bolt. Tighten the ball joint locknut and apply grease to the ball joint. Repeat the procedure for the other side.

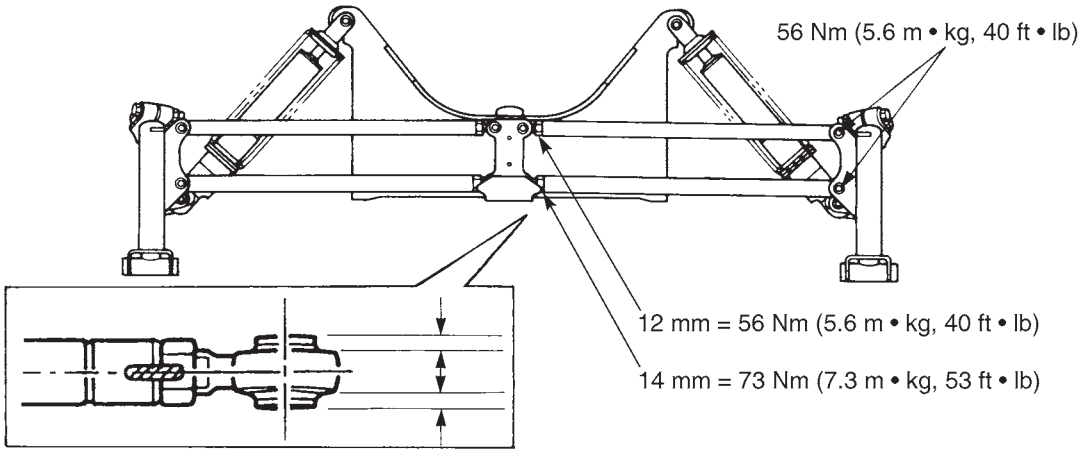

CAUTION:

When tightening the ball joint locknut, be sure to keep the ball joint outer housing centered with the ball to prevent binding.

Ski alignment

NOTE:

Be sure to verify the spring preload setting and the ski spindle camber before adjusting the ski toe out since either of those adjustments may affect the ski toe out setting.

Point the skis straight forward and measure the amount of ski toe out.

Ⓐ Ski toe out:
0 ~ 15 mm (0 ~ 0.59 in)

ⓐ – ⓑ = Toe out

Refer to “STEERING SYSTEM” in CHAPTER 2.

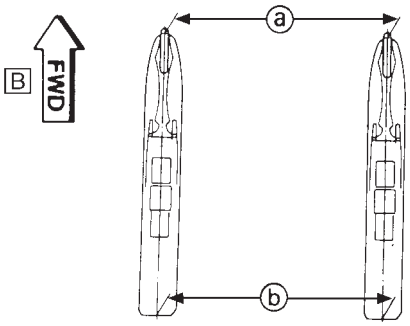

Front arm part number

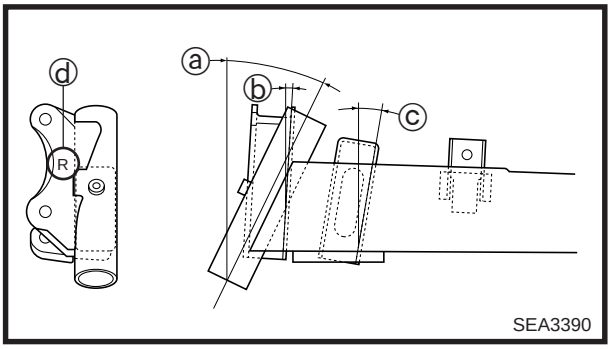

	A Part number	B Caster ⓐ	C Control rod bracket angle ⓑ	D Shock absorber bracket angle ⓒ	E ID mark ⓓ
VX600ER/VT600	8DM-2382E-10 (L/H) 8DM-2382F-10 (R/H)	25.5°	3°	10°	M
SX600	8CR-2382E-20 (L/H) 8CR-2382F-20 (R/H)	25.5°	3°	10°	R
MM600	8CS-2382E-20 (L/H) 8CS-2382F-20 (R/H)	25.5°	3°	7°	S

Stabilizer part number

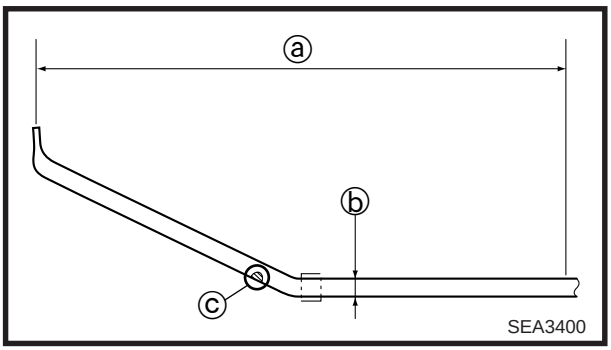

	A Part number	B Size length ⓐ × bar diameter ⓑ	C ID color ⓒ
VX600ER/SX600	8CR-2386E-00	896 × 16 mm (35.2755 × 0.6299 in)	Purple
MM600	8CS-2386E-00	832 × 16 mm (32.7558 × 0.6299 in)	White
VT600	8CW-2386E-00	896 × 18 mm (35.2755 × 0.7087 in)	Light green

Control rod part number

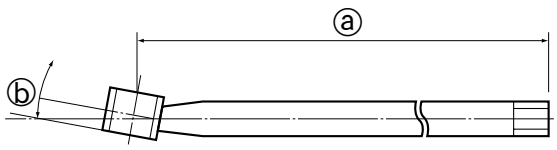

SEA3410

		C Part Number	D Length ⓐ	E Angle ⓑ
VX600ER/SX600/ VT600	A Upper B Lower	8CR-2384E-20 8CR-2384F-20	439.5 ± 1 mm (17.3031 ± 0.0394 in) 431.6 ± 1 mm (16.9921 ± 0.0394 in)	10.8 ± 0.5° 10.8 ± 0.5°
MM600	A Upper B Lower	8CS-2384E-20 8CS-2384F-20	393.7 ± 1 mm (15.5000 ± 0.0394 in) 387.7 ± 1 mm (15.2637 ± 0.0394 in)	8.8 ± 0.5° 8.8 ± 0.5°

POWER TRAIN

PRIMARY SHEAVE AND DRIVE V-BELT

A:		
	1st	120 Nm (12.0 m · kg, 85 ft · lb)
	2nd	60 Nm (6.0 m · kg, 43 ft · lb)

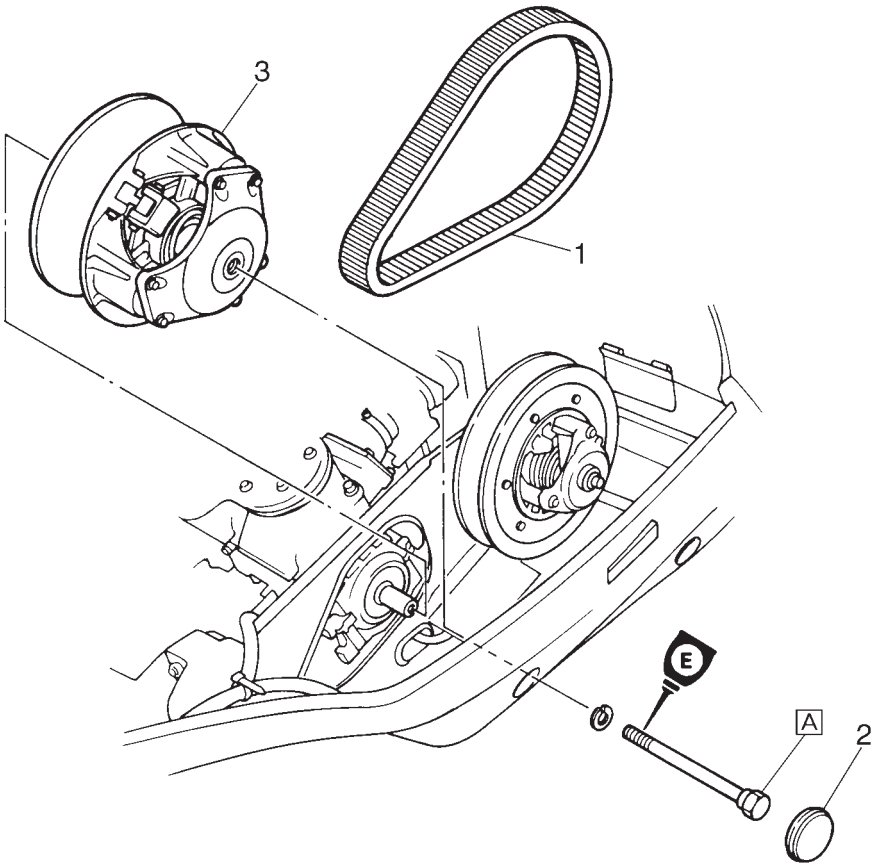

SEA4010

Order	Job name/Part name	Q'ty	Remarks
	Primary sheave removal		Remove the parts in the order listed below.
1	V-belt	1	
2	Blind cap	1	
3	Primary sheave assembly	1	
			For installation, reverse the removal procedure.

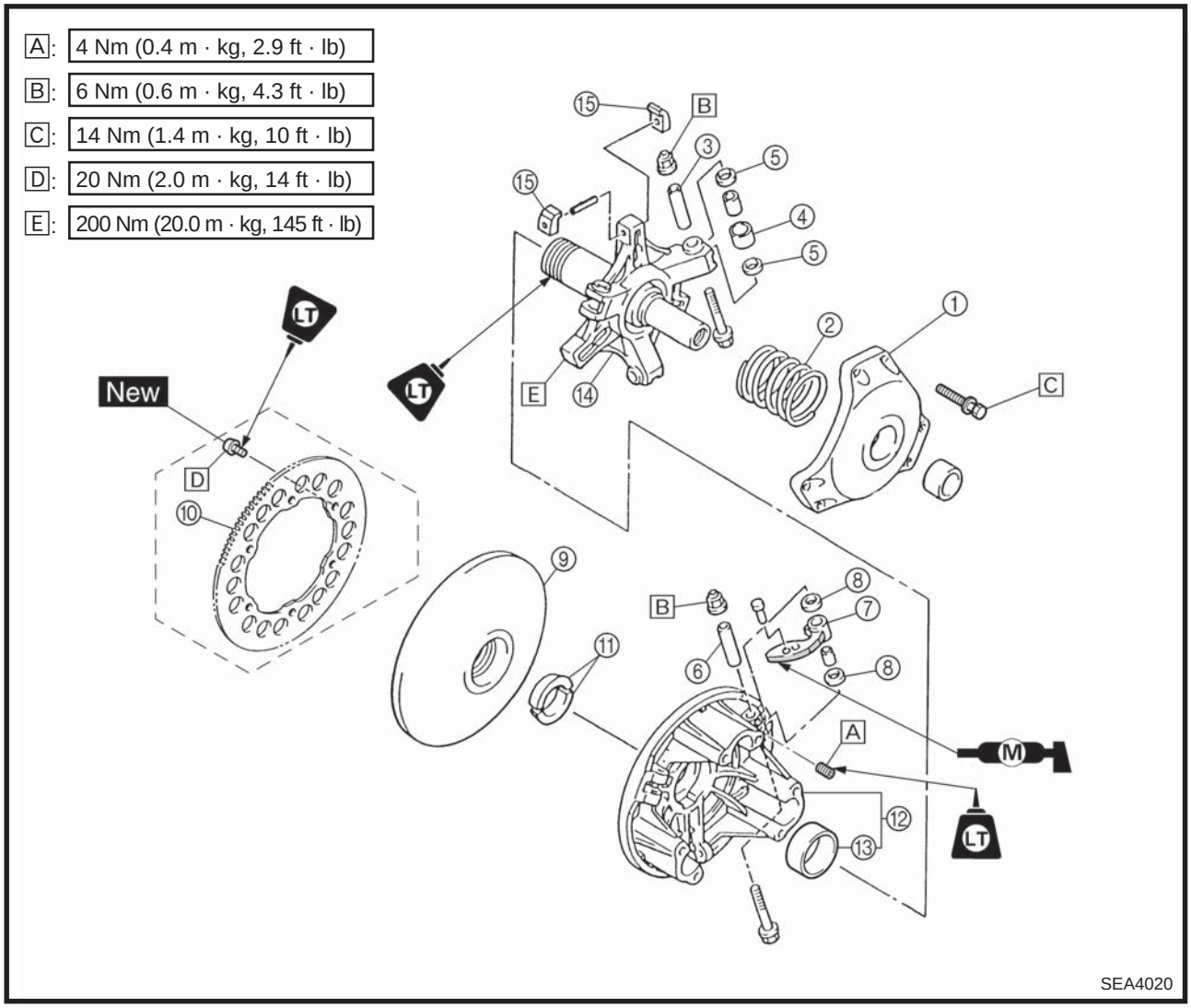

Order	Job name/Part name	Q'ty	Remarks
	Primary sheave disassembly		Remove the parts in the order listed below.
①	Primary sheave cap	1	
②	Primary sheave spring	1	
③	Collar	3	
④	Roller	3	
⑤	Washer	6	
⑥	Collar	3	
⑦	Weight	3	
⑧	Washer	6	
⑨	Fixed sheave	1	
⑩	Starter motor driven gear	1	(VX600ER/VT600)
⑪	Fixed sheave stopper	1	
⑫	Sliding sheave	1	
⑬	Bushing	1	
⑭	Spider	1	
⑮	Slider	6	
			For assembly, reverse the disassembly procedure.

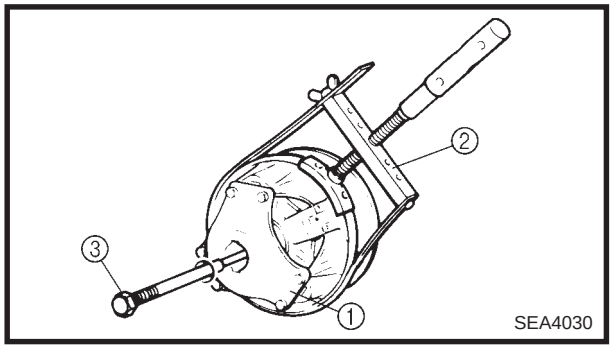

REMOVAL

1. Remove:
   - Primary sheave assembly ①

NOTE:

Use the primary sheave holder ② and primary sheave puller ③.

Primary sheave holder:
90890-01701, YS-01880
Primary sheave puller:
YS-01881-1, YS-01859-1

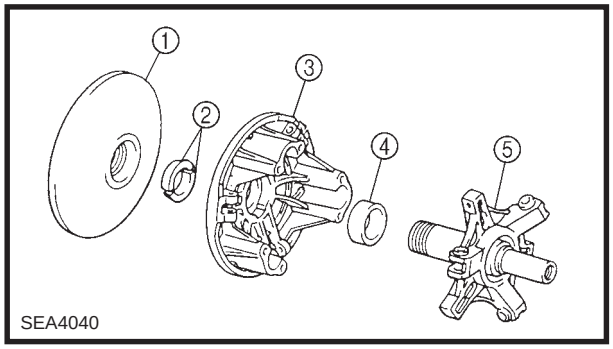

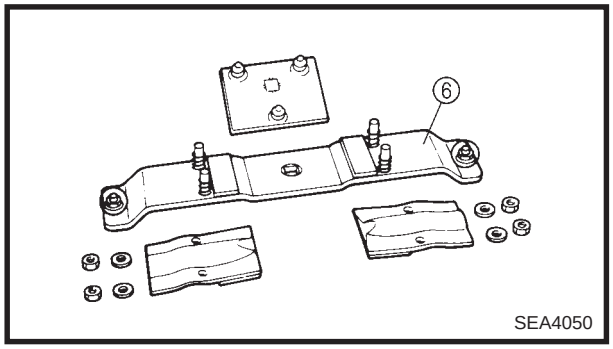

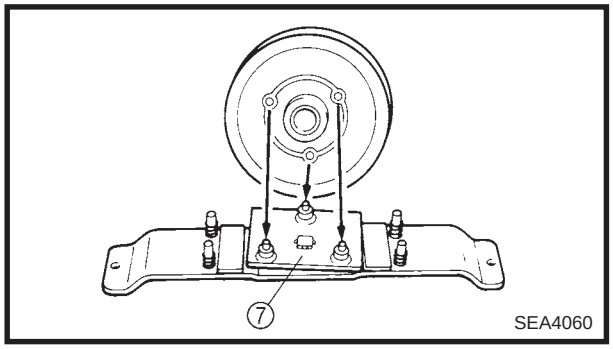

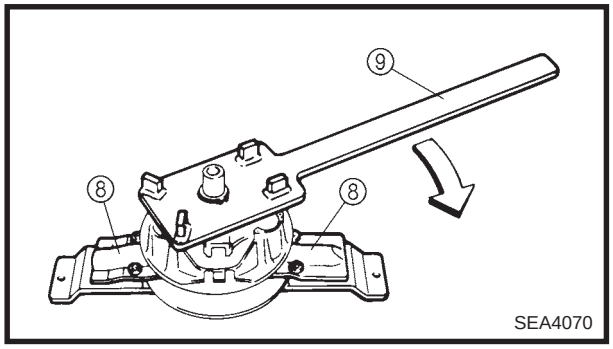

DISASSEMBLY

1. Remove:
   - Fixed sheave ①
   - Stopper ②
   - Sliding sheave ③
   - Bushing ④
   - Spider ⑤

Removal steps:

- Immerse the primary sheave assembly in 80°C ~ 100°C (176°F ~ 212°F) water for several minutes.
- Attach the lower piece of the clutch spider separator ⑥ onto a rigid table using suitable mounting bolts.
  Then, install the clutch separator adapter ⑦ onto the separator.

Clutch spider separator:
YS-28890-C
Clutch separator adapter:
YS-34480

- Fit the primary sheave assembly onto the adapter and secure the supporting plates ⑧.

NOTE:

Securely fit the projections on the adapter into the fixed sheave holes.

- Set the bar wrench ⑨ onto the spider and turn the special tool clockwise to loosen the spider.

Clutch spider separator (bar wrench):
YS-28890-C

CAUTION:

- **The spider has a left-handed thread.**
- **Since a high torque is required to loosen the spider, make sure that the spider, fixed sheave and special tool are well secured. Loosen the spider carefully to prevent cracks and damage to the sheaves and spider.**

- Remove the fixed sheave, fixed sheave stopper, and sliding sheave from the spider.

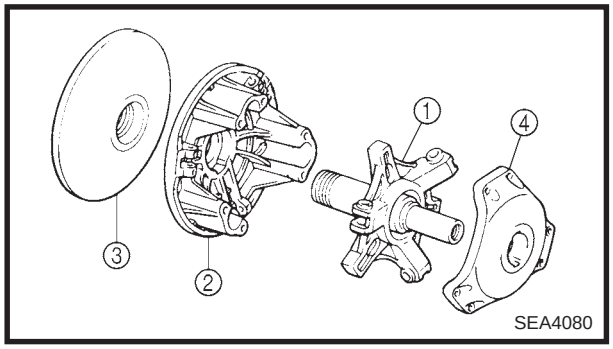

INSPECTION

1. Inspect:
   - Spider ①
   - Sliding sheave ②
   - Fixed sheave ③
   - Primary sheave cap ④
     Cracks/damage → Replace.

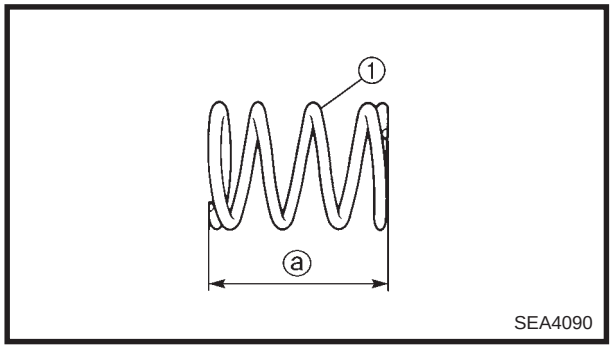

2. Inspect:
   - Primary sheave spring ①
     Cracks/damage → Replace.
3. Measure:
   - Primary sheave spring free length ⓐ
     Out of specification → Replace the primary sheave spring.

Primary sheave spring free length:
VX600ER/SX600:
89.4 mm (3.52 in)
MM600:
91.4 mm (3.60 in)
VT600 for U.S.A./Canada:
86.7 mm (3.41 in)
VT600 for Europe:
87.4 mm (3.44 in)

NOTE:

When changing the primary sheave springs, refer to "GEAR SELECTION" in CHAPTER 2.

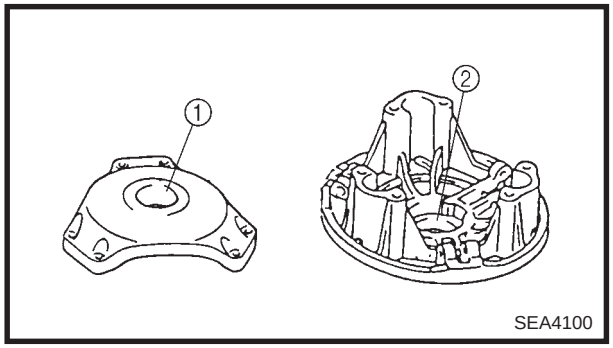

4. Inspect:
   - Primary sheave cap bush ①
   - Sliding sheave bush ②
     Cracks/damage → Replace.

Clutch bushing press:
YS-42424

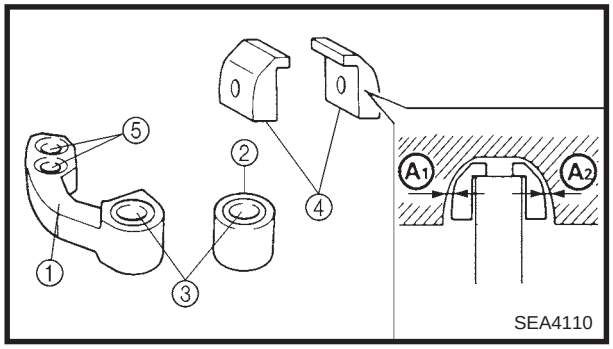

5. Inspect:
   - Weight ①
   - Roller ②
   - Bushing ③
   - Slider ④
   - Rivet ⑤
   - Collar
     Wear/scratches/damage → Replace.
   - Slider inside clearance
     Out of specification → Replace the slider.

Slider inside clearance = (A1) + (A2)

Slider inside clearance:
Min. 0 mm (0 in)
Max. 0.3 mm (0.0118 in)

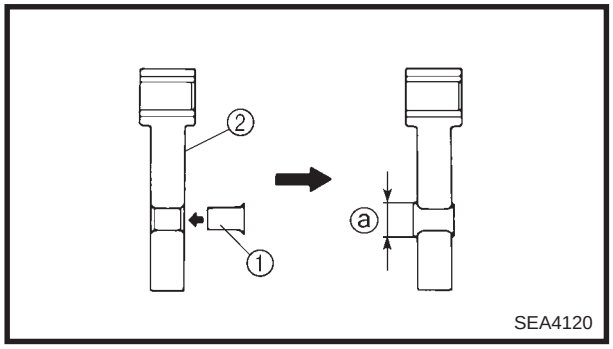

Rivet replacement steps:
- Remove old rivet with the appropriate drill.
- Insert the rivet ① from the ID mark ② side.
- Press or peen the rivet head so that the diameter ⓐ of the rivet head measures 8.2 mm (0.32 in) or larger .

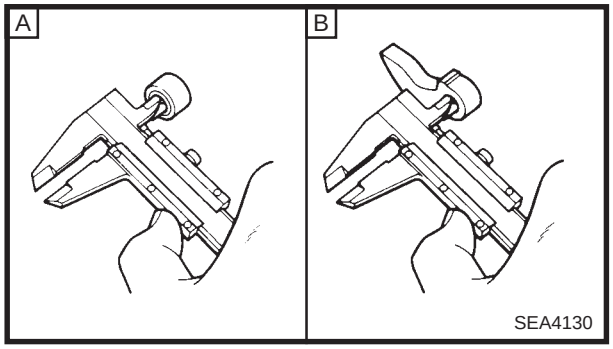

6. Measure:
   - Bushing inside diameter
     Out of specification → Replace as a set.

Bushing inside diameter:
A Roller
New: 9.077 mm (0.357 in)
Wear limit: 9.3 mm (0.366 in)
B Weight
New: 8.077 mm (0.318 in)
Wear limit: 8.3 mm (0.327 in)

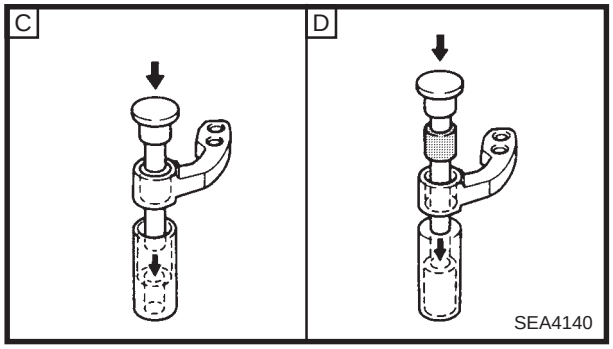

NOTE:

When replacing the weight and roller bushings, use the YXR clutch bushing jig kit.

	YXR clutch bushing jig kit: YS-39752

C Removing
D Installing

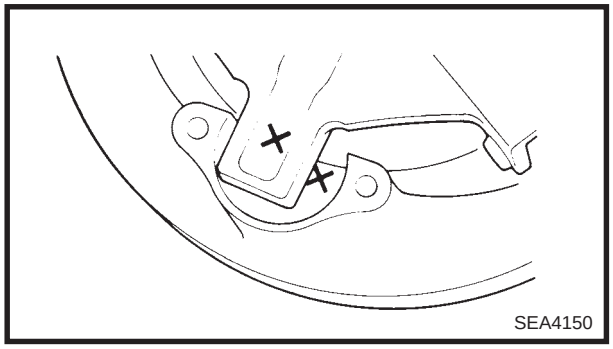

ASSEMBLY

1. Install:
   - Sliding sheave (onto the spider)

NOTE:

Be sure the sliding sheave match mark (X) is aligned with the spider match mark (X).

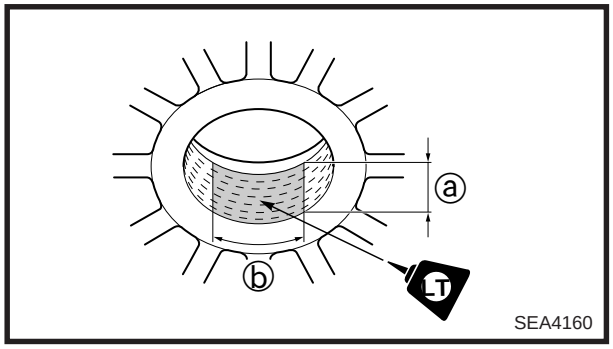

2. Install:
   - Fixed sheave (onto the spider)

NOTE:

- Clean the threads.
- Apply LOCTITE® #648 to the fixed sheave as shown.

CAUTION:

LOCTITE® should be applied only to the specified area. Never apply it to the bushings and other areas.

ⓐ 16 mm (0.63 in)
ⓑ 30 ~ 35 mm (1.18 ~ 1.38 in)

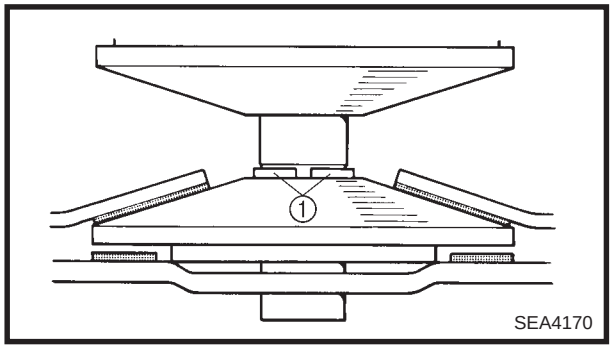

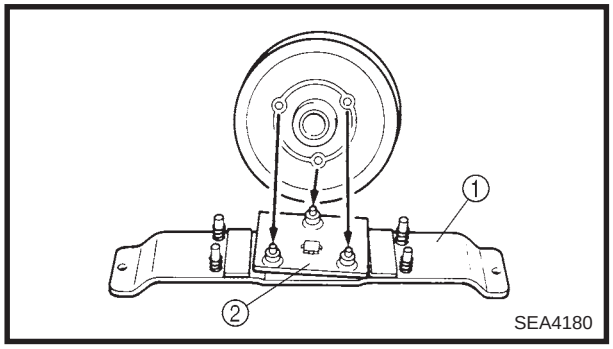

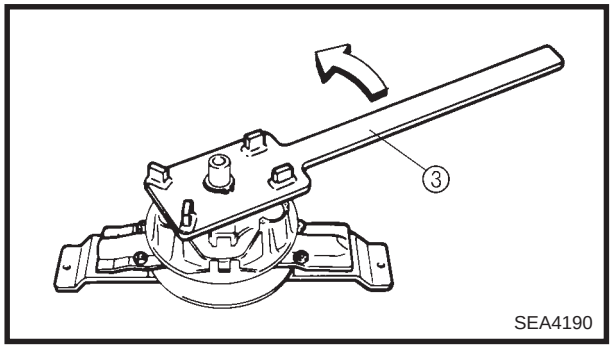

3. Install:
   - Fixed sheave stoppers ①

NOTE:

Stopper tapered portion should face fixed sheave.

4. Tighten:
   - Spider

Tightening steps:

- Finger-tighten the spider until it is stopped by the fixed sheave stopper.
- Hold the fixed sheave with the clutch spider separator ①.

	**Clutch spider separator:** **YS-28890-C**

NOTE:

Securely fit the projections on the clutch separator adapter ② into the fixed sheave holes.

- Tighten the spider to specification using the bar wrench ③.

	**Spider:** **200 Nm (20 m · kg, 145 ft · lb)**

CAUTION:

The spider has a left-handed thread.

⚠ WARNING

- **Do not operate the primary sheave until the LOCTITE® has dried completely. Wait 24 hours before operating the primary sheave.**
- **Since a high torque is required to tighten the spider, make sure the spider, fixed sheave, and special tool are well secured. Tighten the spider carefully to prevent cracks and damage to the sheaves and spider.**

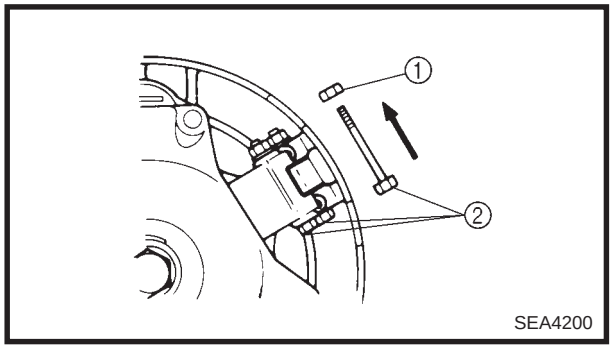

5. Install:
   - Weight
   - Nuts ①

	Nut (weight): **6 Nm (0.6 m · kg, 4.3 ft · lb)**

NOTE:

To maintain the primary sheave balance, the bolts ② must be installed with their threaded portions pointing in a counterclockwise direction, as illustrated.

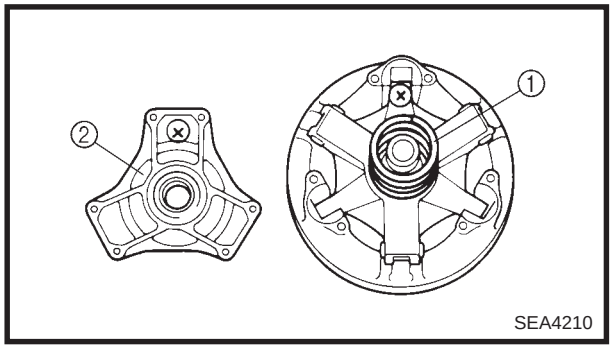

6. Install:
   - Primary sheave spring ①
   - Primary sheave cap ②

NOTE:

Be sure the sheave cap match mark (X) is aligned with the spider match mark (X).

	Bolt (primary sheave cap): **14 Nm (1.4 m · kg, 10 ft · lb)**

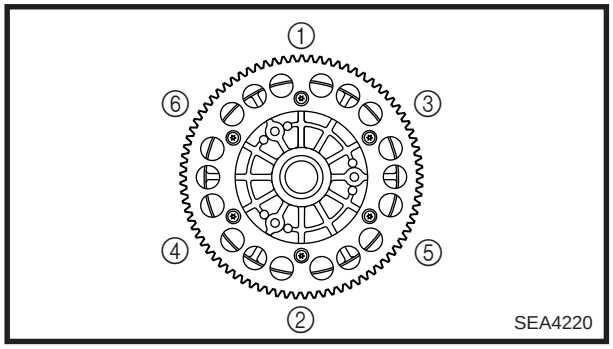

7. Tighten:
   - Bolts (VX600ER/VT600)

Tightening steps:

- Temporarity tighten the bolts ① ~ ⑥ in the order shown.

	Bolt (starter motor driven gear): **20 Nm (2.0 m · kg, 14 ft · lb)**

NOTE:

- Clean the threads.
- Apply LOCTITE® #648.

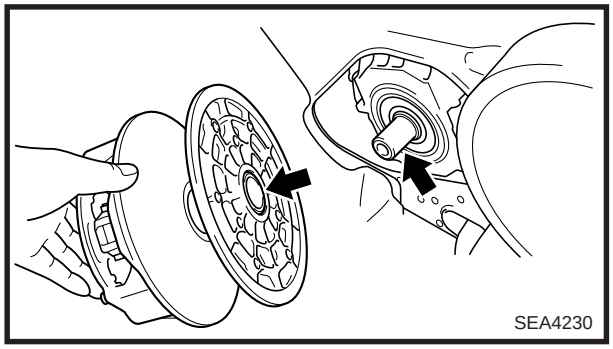

INSTALLATION

1. Install:
   - Primary sheave assembly

CAUTION:

Be sure to remove any oil or grease from the tapered portion of the crankshaft and spider using a cloth dampened with thinner.

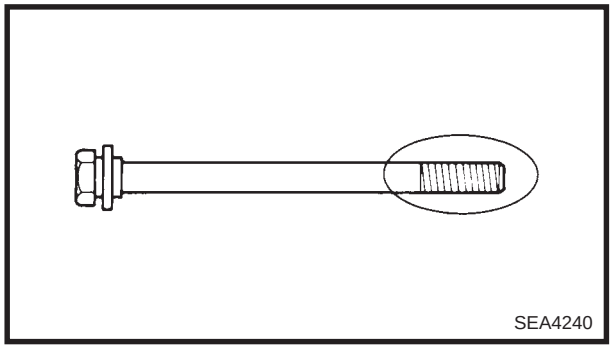

2. Apply:
   - YAMALUBE 2-cycle oil or an equivalent grease (to threads of primary sheave bolt)

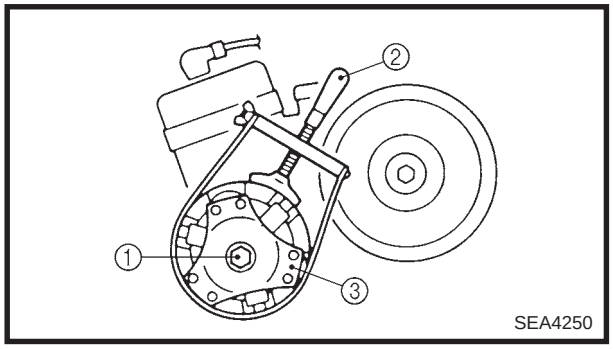

3. Tighten:
   - Bolt (primary sheave) ①

Tightening steps:

- Hold the primary sheave ③ using the primary sheave holder ② and tighten the bolt (primary sheave) to specification.

Primary sheave holder:
90890-01701, YS-01880

Bolt (primary sheave):
(initial tightening)
120 Nm (12.0 m · kg, 85 ft · lb)

- Loosen the bolt (primary shave) completely.
- Retighten the bolt (primary sheave) to specification.

Bolt (primary sheave):
60 Nm (6.0 m · kg, 43 ft · lb)

4. Adjust:
   - V-belt position
     Refer to “DRIVE V-BELT” in CHAPTER 2.
   - Sheave distance
   - Sheave offset
   - Secondary sheave free play (clearance)
     Refer to “SHEAVE DISTANCE AND OFFSET ADJUSTMENT” in CHAPTER 2.

SECONDARY SHEAVE

A: 64 Nm (6.4 m · kg, 46 ft · lb)

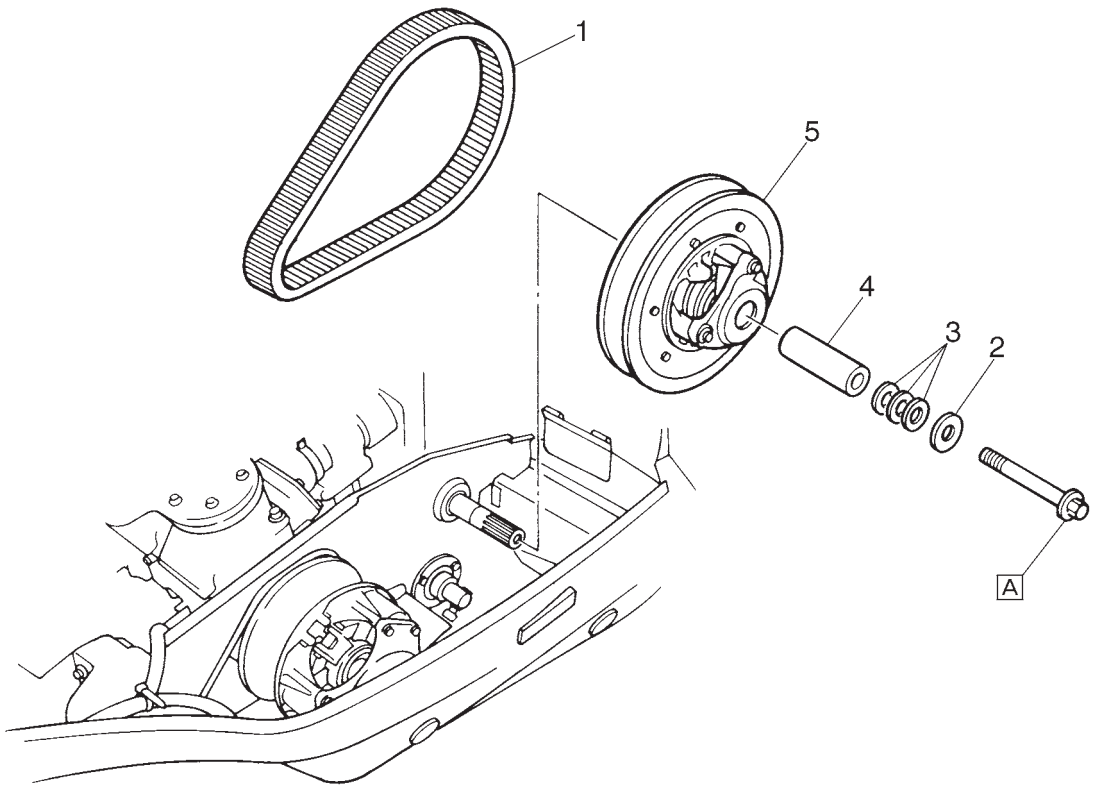

SEA4260

Order	Job name/Part name	Q'ty	Remarks
	Secondary sheave removal		Remove the parts in the order listed below.
1	V-belt	1	
2	Washer	1	
3	Shim	–	Refer to "SHEAVE DISTANCE AND OFFSET ADJUSTMENT" in CHAPTER 2.
4	Collar	1	
5	Secondary sheave assembly	1	
			For installation, reverse the removal procedure.

A: 4 Nm (0.4 m · kg, 2.9 ft · lb)
B: 6.5 Nm (0.65 m · kg, 4.6 ft · lb)
C: 10 Nm (1.0 m · kg, 7.2 ft · lb)
D: 23 Nm (2.3 m · kg, 17 ft · lb)

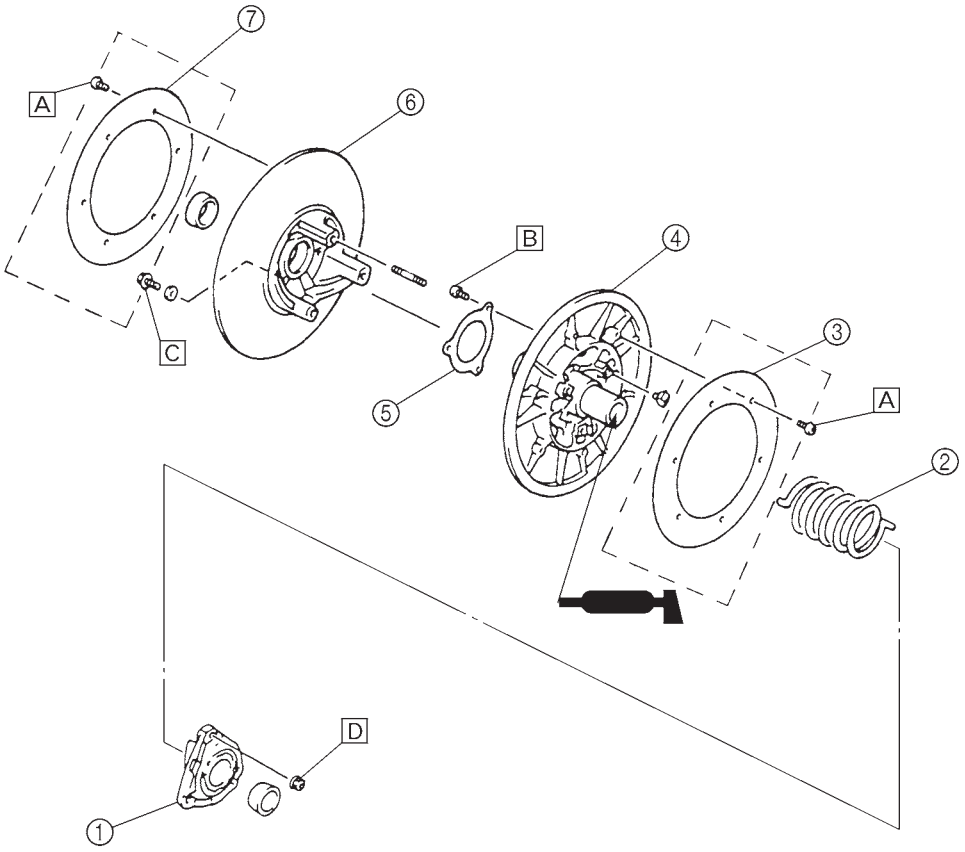

: ① ESSO beacon 325 grease or Aeroshell grease #7A

SEA4270

Order	Job name/Part name	Q'ty	Remarks
	Secondary sheave disassembly		Remove the parts in the order listed below.
①	Spring seat	1	
②	Secondary sheave spring	1	
③	Secondary sheave plate 1	1	(SX600)
④	Fixed sheave	1	
⑤	Stopper	1	
⑥	Sliding sheave	1	
⑦	Secondary sheave plate 2	1	(SX600)
			For assembly, reverse the disassembly procedure.

DISASSEMBLY

⚠ WARNING

- **Use extreme CAUTION when disassembling the secondary sheave since serious injury can occur due to the sudden release of spring tension. Use the sheave compressor to contain the spring tension before removing the nuts (spring seat).**
- **Do not attempt this procedure unless you have the proper tools and understand the instructions thoroughly.**

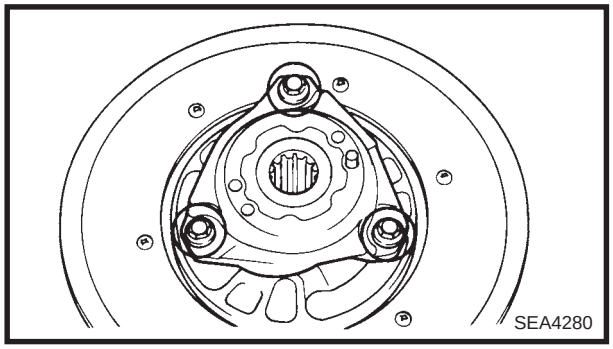

1. Remove:
   - Nuts (spring seat)

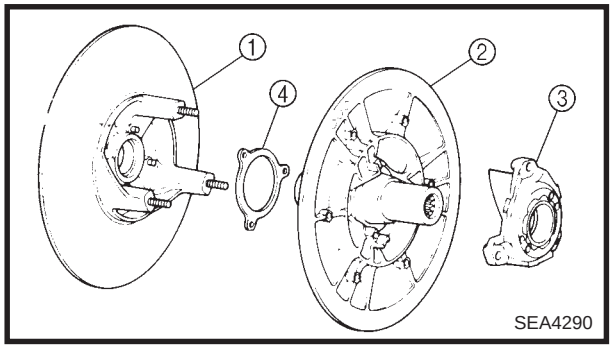

INSPECTION

1. Inspect:
   - Sliding sheave ①
   - Fixed sheave ②
   - Spring seat ③
     Cracks/damage → Replace.
   - Stopper ④
     Wear/damage → Replace.

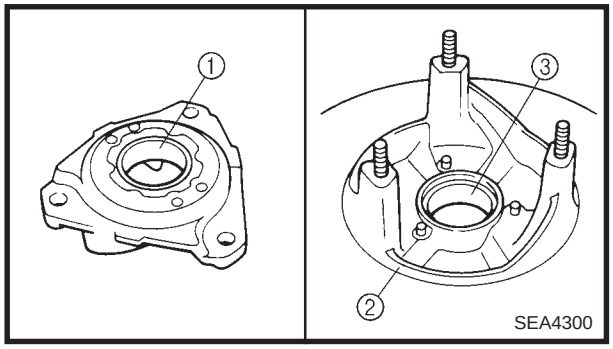

2. Inspect:
   - Bushing (spring seat) ①
   - Sliding sheave (V-belt contact surface) ②
     Scratches/wear/damage → Replace.
   - Sliding bushing ③
     Unsymmetrical wear/damage → Replace.

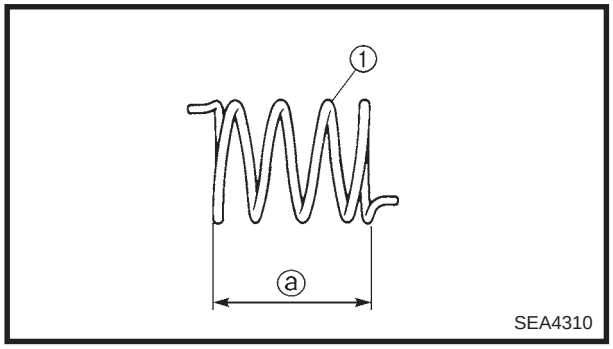

3. Inspect:
   - Secondary sheave spring ①
     Cracks/damage → Replace.
4. Measure:
   - Secondary sheave spring free length ⓐ
     Below specification → Replace the secondary sheave spring.

	Secondary sheave spring free length: 75 mm (2.95 in)

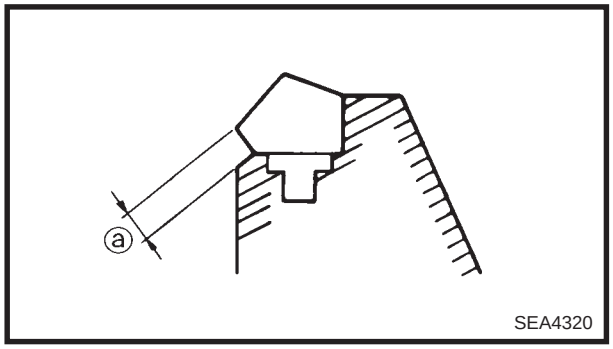

5. Measure:
   - Ramp shoe thickness ⓐ
     Out of specification → Replace the ramp shoe.

	Wear limit: **1.0 mm (0.04 in)**

ASSEMBLY

1. Install:
   - Stopper
   - Sliding sheave

	Screw (stopper): **6.5 Nm (0.65 m · kg, 4.6 ft · lb)**

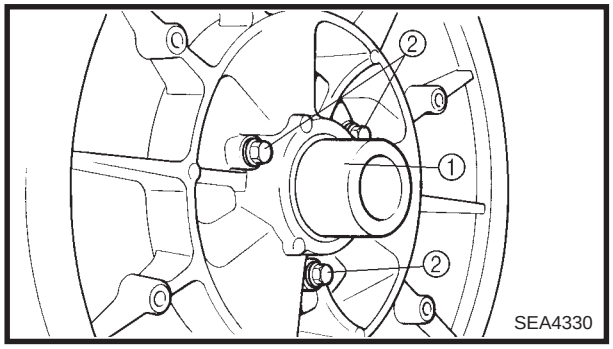

2. Install:
   - Fixed sheave ①
   - Bolts ②
     (along with the shims)

	Bolt: **10 Nm (1.0 m · kg, 7.2 ft · lb)**

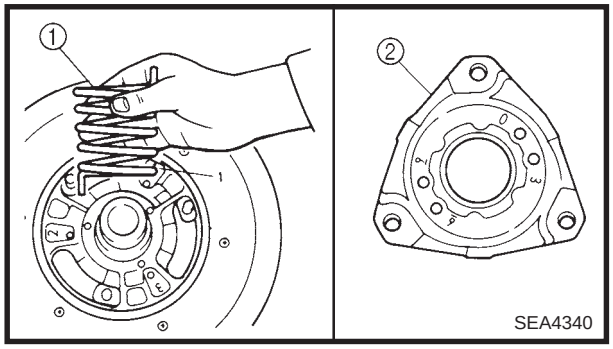

3. Install:
   - Secondary sheave spring ①
   - Spring seat ②

NOTE:

Hook the end of the secondary sheave spring into the spring holes in the fixed sheave. Hook the other end of the spring into the holes in the spring seat.

Standard spring position:
2-6 (VX600ER/SX600/MM600)
(VT600 for Europe)
1-6 (VT600 for U.S.A/Canada)

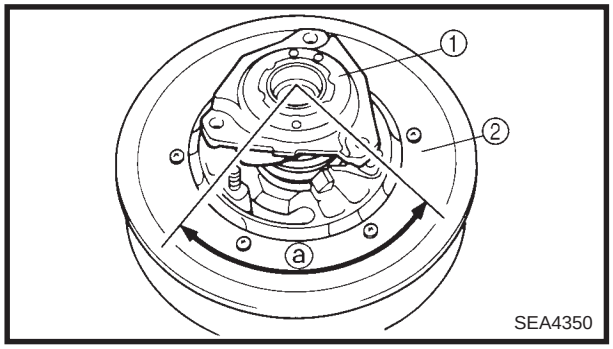

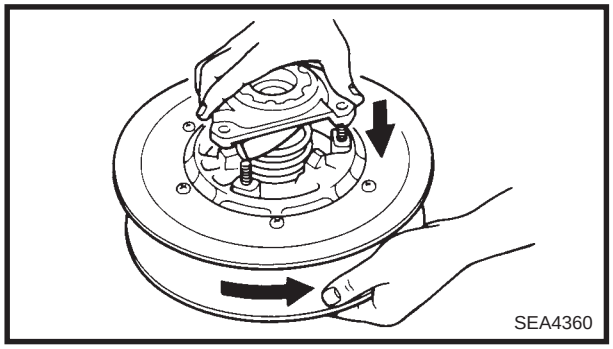

Installation steps:

- Hold the spring seat ① and turn the fixed sheave ② counterclockwise to the specified angle ⓐ.

NOTE:

The holes in the spring seat should align with the bolts on the sliding sheave.

ⓐ = (sheave hole number + spring seat hole number) × 10

Twist angle:
80° (VX600ER/SX600/MM600)
(VT600 for Europe)
70° (VT600 for U.S.A./Canada)

- Push down on the spring seat until the bolts come through the holes.
- While pushing down on the spring seat, install the nuts and tighten them to the specified torque.

Nut (spring seat):
23 Nm (2.3 m · kg, 17 ft · lb)

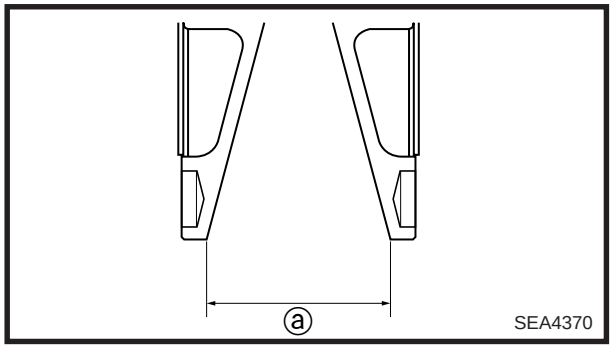

4. Measure:
   - Secondary sheave clearance ⓐ
     Out of specification → Adjust.

Secondary sheave clearance:
35.0 ~ 35.8 mm (1.38 ~ 1.41 in)

5. Calculate:
   - Shim thickness

NOTE:

For example, if the clearance is 36 mm (1.42 in), install a 0.5-mm (0.02-in) shim on each bolt so the clearance is 35.5 mm (1.40 in).

6. Adjust:
   - Secondary sheave clearance

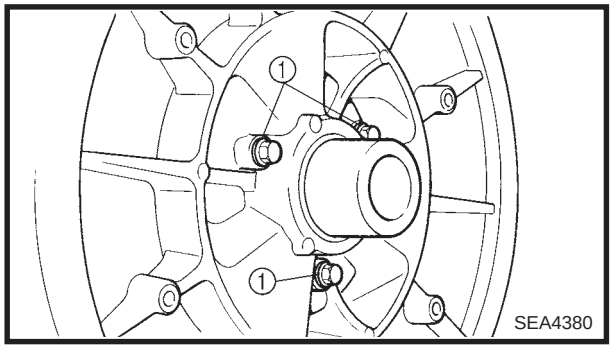

Adjustment steps:

- Disassemble the secondary sheave.
- Remove the bolts and original shims ①.
- Install new shims of the proper thickness and reassemble the secondary sheave.
- Measure the secondary sheave clearance again. Repeat these steps until the clearance is within specification.

NOTE:

Yamaha recommends keeping the original shims.

Shims:

Part number	Thickness
90201-061H1	0.5 mm (0.02 in)
90201-06037	1.0 mm (0.04 in)

INSTALLATION

1. Lubricate:
   - Splines (fixed sheave)

Recommended grease:
ESSO beacon 325 grease or Aeroshell grease #7A

2. Tighten:

Bolt (secondary cheave):
64 Nm (6.4 m · kg, 46 ft · lb)

3. Adjust:
   - V-belt position
     Refer to “DRIVE V-BELT” in CHAPTER 2.
   - Sheave distance
   - Sheave offset
   - Secondary sheave free play (clearance)
     Refer to “SHEAVE DISTANCE AND OFFSET ADJUSTMENT” in CHAPTER 2.

DRIVE CHAIN HOUSING

WITHOUT REVERSE MODEL

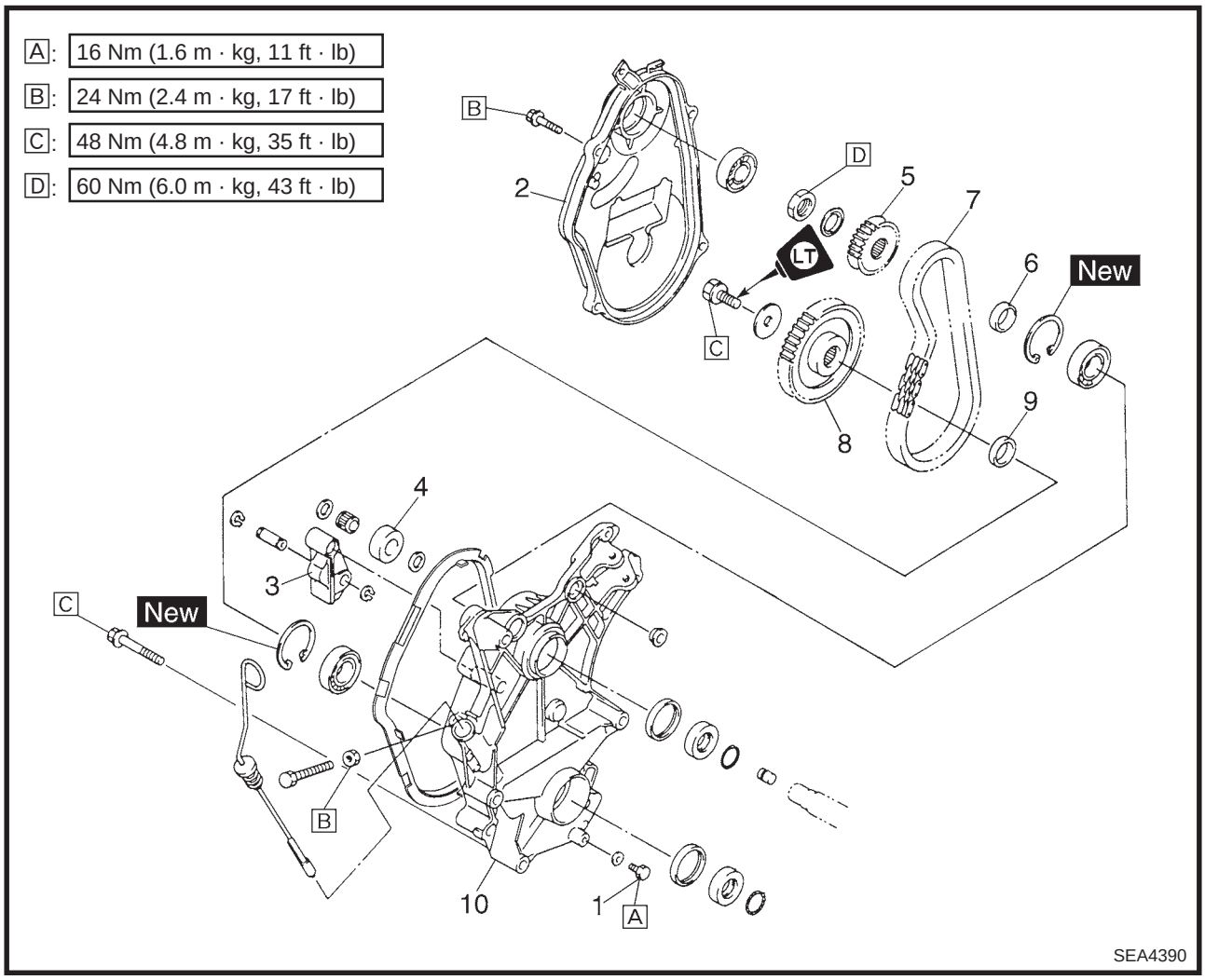

Order	Job name/Part name	Q'ty	Remarks
	Drive chain housing removal		Remove the parts in the order listed below.
	Coolant hose bracket		Refer to "HEAT EXCHANGER" in CHAPTER 6.
	Frame cross member bolt (M10 × 65)		Refer to "AC MAGNETO" in CHAPTER 5.
	Brake caliper		Refer to "BRAKE".
	Parking brake		Refer to "BRAKE".
	Chain tension adjuster		Loosen.
1	Bolt	1	Drain the oil.
2	Drive chain housing cover	1	
3	Chain tensioner	1	
4	Roller	1	
5	Drive sprocket	1	
6	Collar	1	
7	Drive chain	1	
8	Driven sprocket	1	
9	Collar	1	
10	Drive chain housing	1	
			For installation, reverse the removal procedure.

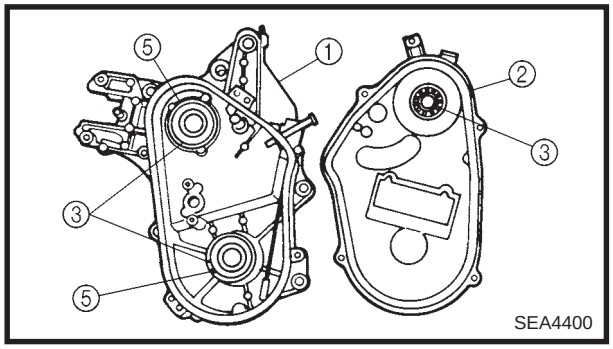

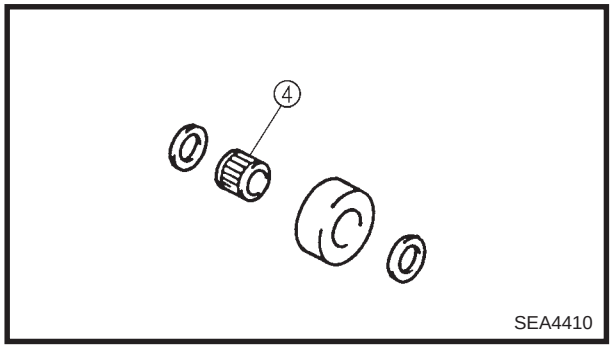

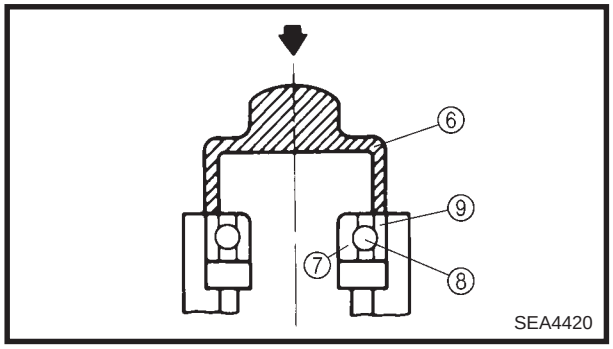

INSPECTION

1. Inspect:
   - Drive chain housing ①
   - Drive chain housing cover ②
     Cracks/damage → Replace.
   - Oil seals (drive chain housing)
     Wear/damage → Replace.
   - Bearings (drive chain housing and cover) ③
     Pitting/damage → Replace.
   - Bearing (chain tensioner) ④
     Pitting/damage → Replace the bearing and the inner race holder as a set.

Replacement steps:

- Remove the circlip ⑤ (drive chain housing).
- Remove the bearing(s) ③ using a general bearing puller.
- Install the new bearing(s).

NOTE:

Use a socket ⑥ that is the same size as the outside diameter of the bearing race.

CAUTION:

Do not strike the inner race ⑦ or ball bearings ⑧. Contact only the outer race ⑨.

- Install a new circlip (drive chain housing).

CAUTION:

Always use new circlips.

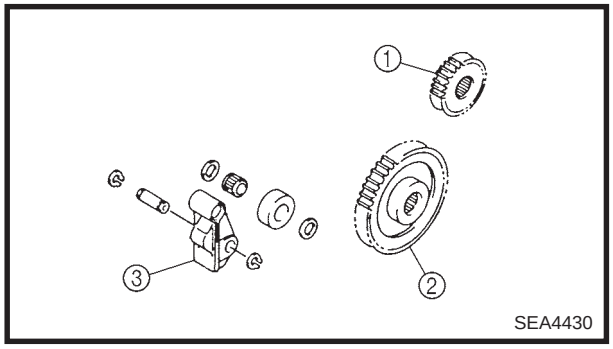

2. Inspect:
   - Drive sprocket ①
   - Driven sprocket ②
   - Chain tensioner ③
     Pitting/wear/damage → Replace.

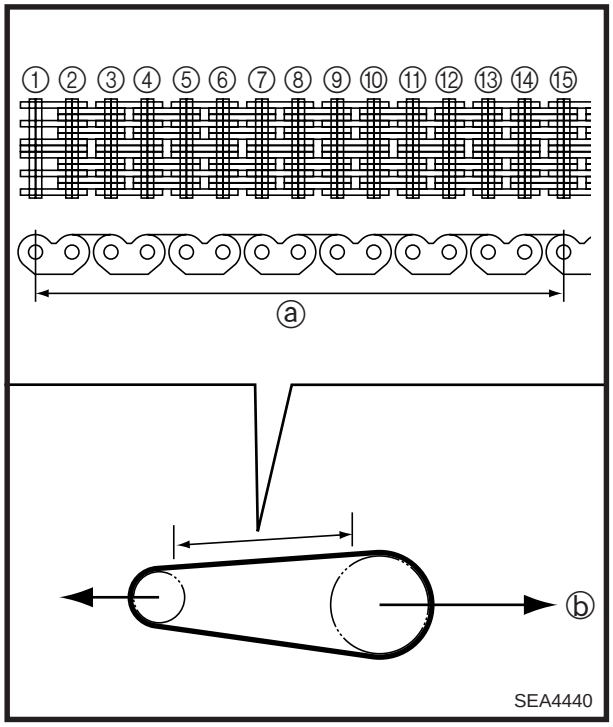

3. Measure:
   - 14 link section ⓐ of the drive chain
     Using a spring scale, pull on the drive chain with 36 kg (80 lb) of force ⓑ.
     Out of specification → Replace the drive chain.

Maximum 14 link drive chain section length:
133.35 mm (5.25 in)
Limit 137.35 mm (5.41 in)

NOTE:
- Measure the length between drive chain pin ① and ⑮ as shown.
- Perform this measurement at two or three different places.

If replacement is necessary, always replace the chain and the sprockets as a set.

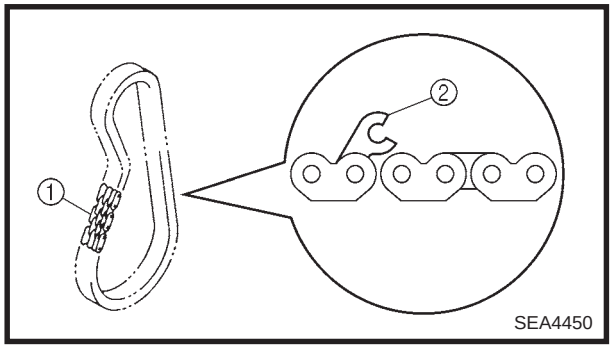

4. Inspect:
   - Drive chain ①
     Stiffness → Clean and lubricate or replace.
   - Drive chain plates ②
     Damage/wear → Replace the drive chain.
     Cracks → Replace the drive chain.

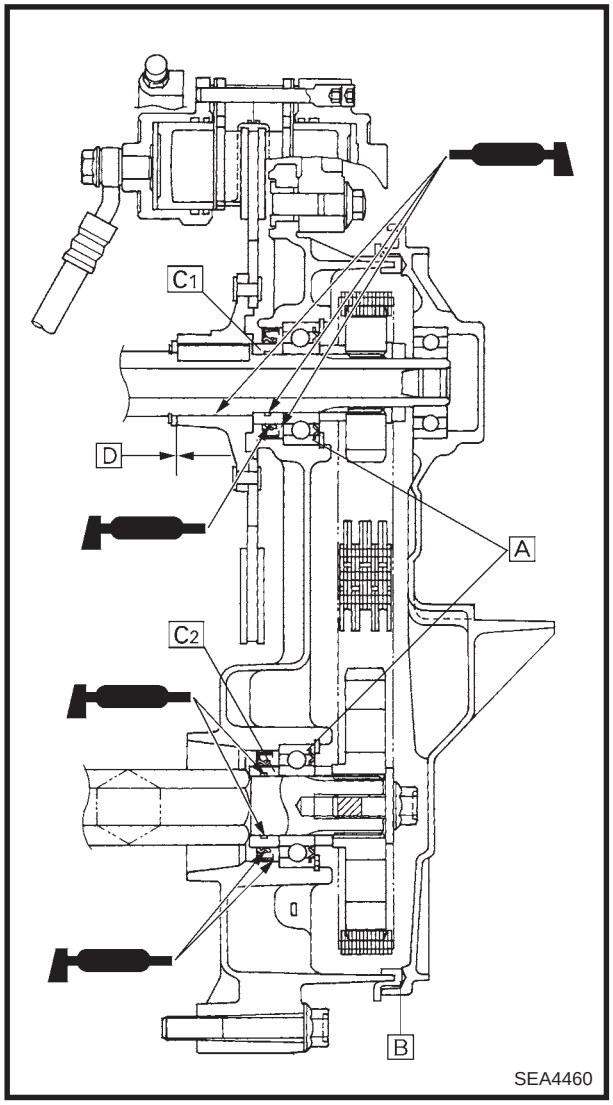

INSTALLATION

1. During installation, pay attention to the following.

A Make sure that the bearing seals face towards the drive chain as shown.

B Properly install the rubber seal onto the drive chain housing, making sure that there are no gaps.

C1 C2 Be sure to install the spacers in their original positions, otherwise the brake disc and jackshaft will stick.

D 0.1 ~ 0.5 mm (0.004 ~ 0.020 in)

: ESSO beacon 325 grease or Aeroshell grease #7A

For the jackshaft and drive chain housing installation, refer to “JACKSHAFT”.

2. Fill:
   - Drive chain housing oil
     Refer to “DRIVE CHAIN” in CHAPTER 2.
3. Adjust:
   - Drive chain slack
     Refer to “DRIVE CHAIN” in CHAPTER 2.

WITH REVERSE MODEL

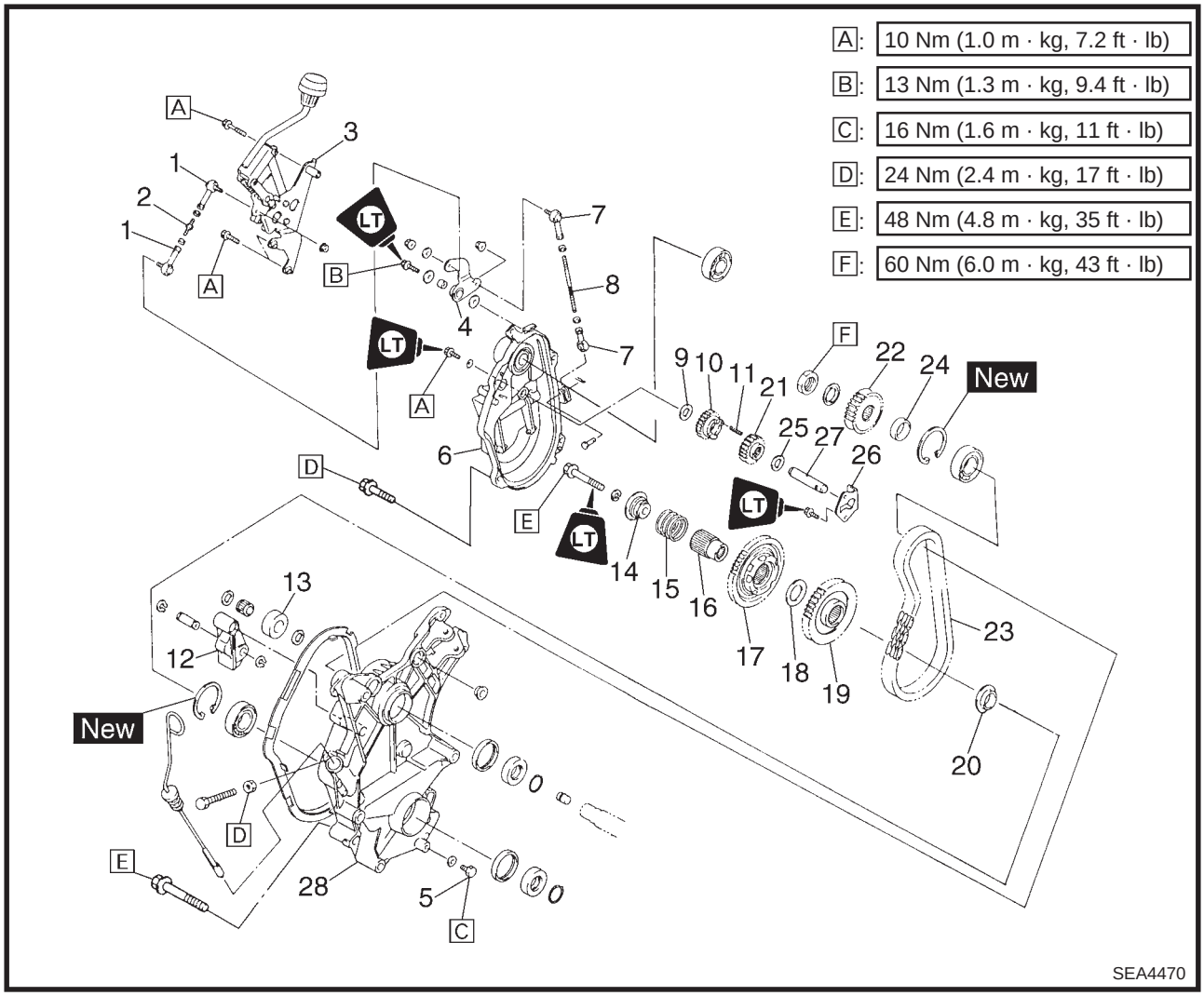

Order	Job name/Part name	Q'ty	Remarks
	Drive chain housing removal		Remove the parts in the order listed below.
	Battery		
	Battery bracket		
	Coolant hose bracket		Refer to "HEAT EXCHANGER" in CHAPTER 6.
	Frame cross member bolt (M10 × 65)		Refer to "AC MAGNETO" in CHAPTER 5.
	Brake caliper		Refer to "BRAKE".
	Parking brake		Refer to "BRAKE".
	Chain tension adjuster		Loosen.
1	Joint	2	
2	Shift rod	1	
3	Shift lever assembly	1	Disconnect the gear position switch leads.
4	Lever	1	
5	Bolt	1	Drain the oil.
6	Drive chain housing cover	1	
7	Joint	2	
8	Lever rod	1	
9	Washer	1	
10	Reverse drive gear	1	

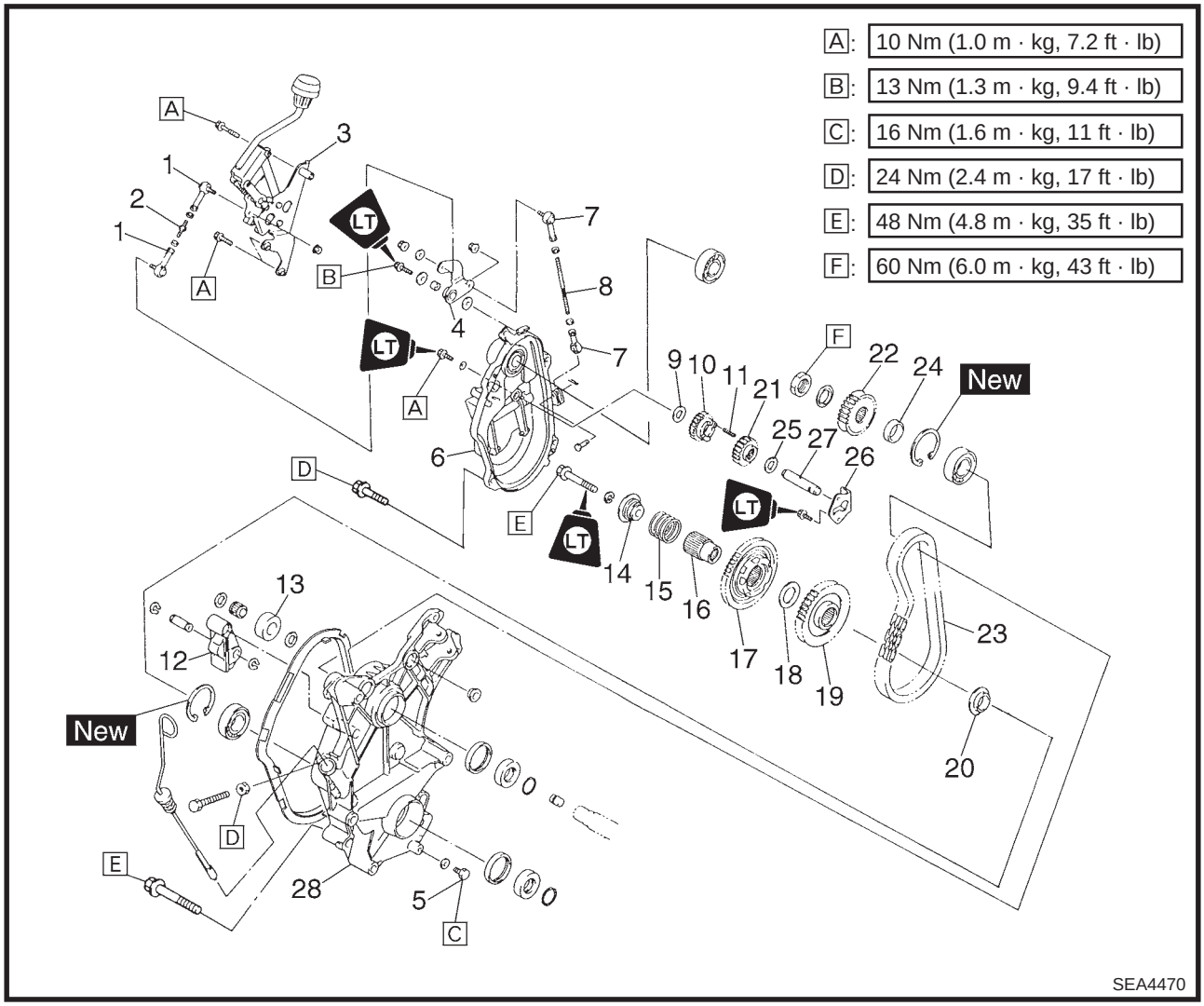

Order	Job name/Part name	Q'ty	Remarks
11	Spring	1	
12	Chain tensioner	1	
13	Roller	1	
14	Collar	1	
15	Spring	1	
16	Journal	1	
17	Reverse driven gear	1	
18	Washer	1	
19	Forward driven sprocket	1	
20	Collar	1	
21	Counter gear	1	
22	Drive sprocket	1	
23	Drive chain	1	
24	Collar	1	
25	Washer	1	
26	Plate	1	
27	Shaft	1	
28	Drive chain housing	1	
			For installation, reverse the removal procedure.

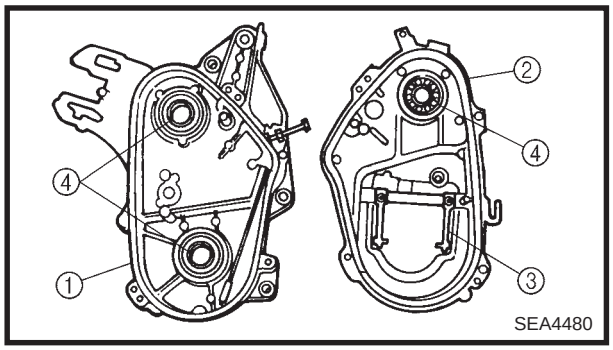

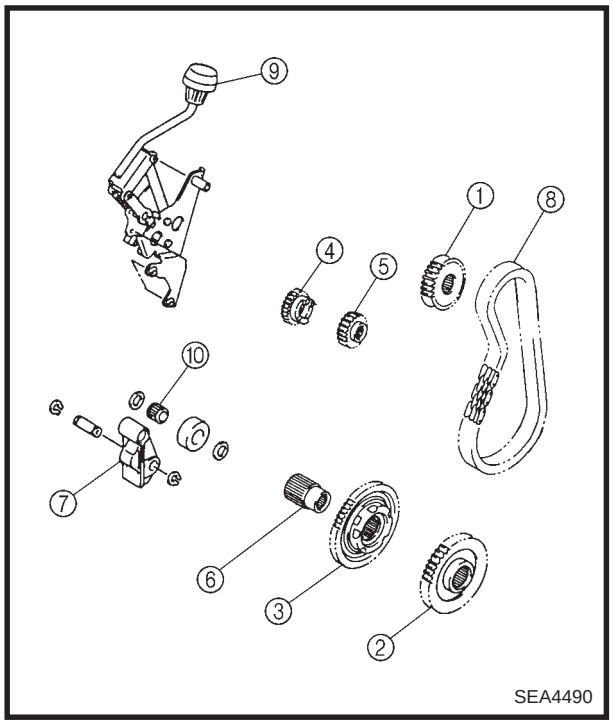

INSPECTION

1. Inspect:
   - Drive chain housing ①
   - Drive chain housing cover ②
     Cracks/damage → Replace.
   - Shift fork ③
     Pitting/wear/damage → Replace.
   - Oil seals (drive chain housing)
     Wear/damage → Replace.
   - Bearings (drive chain housing and cover) ④
     Pitting/damage → Replace.
2. Inspect:
   - Drive sprocket ①
   - Forward driven sprocket ②
   - Reverse driven gear ③
   - Reverse drive gear ④
   - Counter gear ⑤
   - Journal ⑥
   - Chain tensioner ⑦
     Pitting/wear/damage → Replace.
   - Drive chain ⑧
     Wear/damage → Replace.
     Stiff → Clean or replace.
   - Shift lever assembly ⑨
   - Bearing (chain tensioner) ⑩
     Pitting/damage → Replace the bearing and the inner race holder as a set.

For the bearing replacement and drive chain inspection, refer to “WITHOUT REVERSE MODEL”.

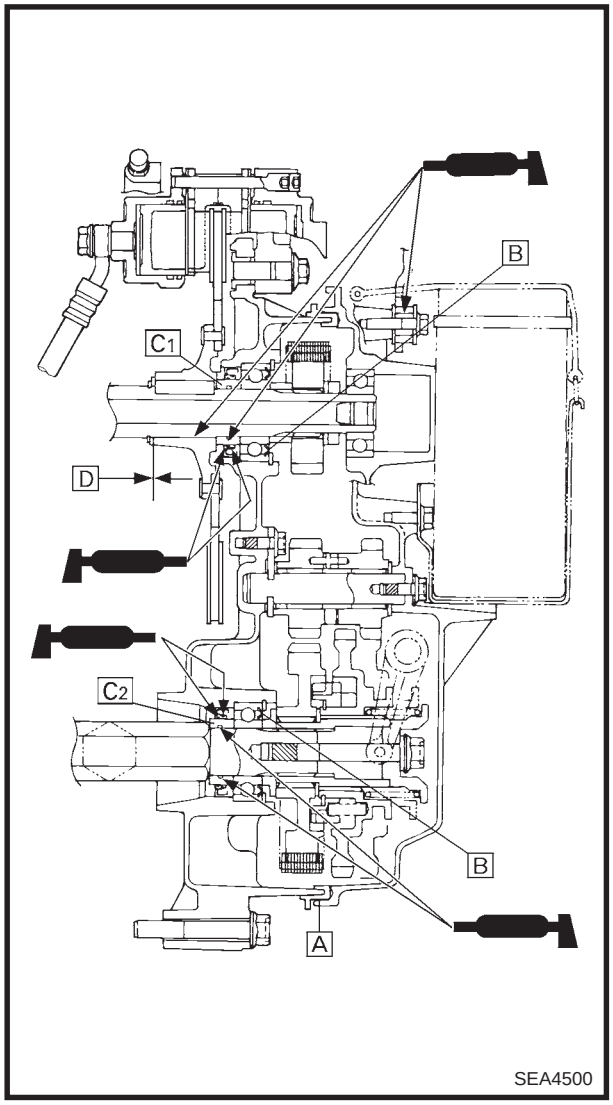

INSTALLATION

1. During installation, pay attention to the following.

A Properly install the rubber seal onto the drive chain housing, making sure that there are no gaps.

B Make sure that the bearing seals face towards the drive chain as shown.

C1 C2 Be sure to install the spacers in their original positions, otherwise the brake disc and jackshaft will stick.

D 0.1 ~ 0.5 mm (0.004 ~ 0.020 in)

: ESSO beacon 325 grease or Aeroshell grease #7A

For the jackshaft and drive chain housing installation, refer to “JACKSHAFT”.

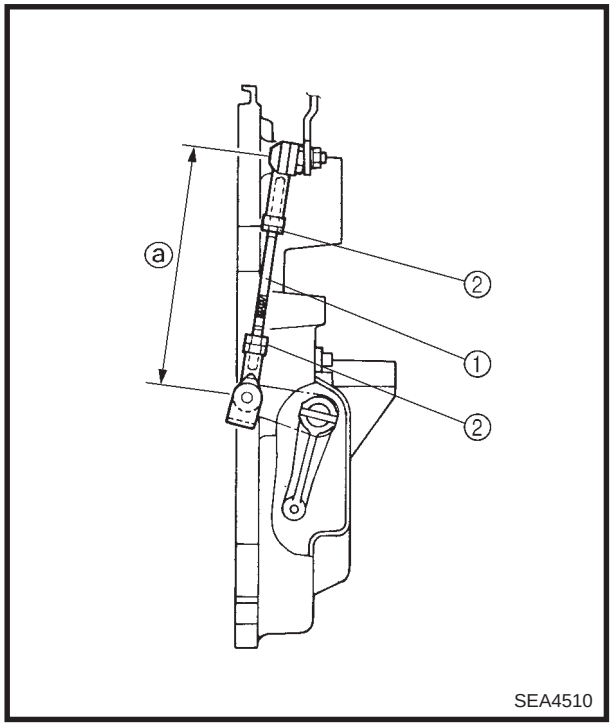

2. Install:
   - Lever rod ①
3. Adjust:
   - Lever rod length ⓐ

Adjustment steps:

- Loosen the locknuts ②.
- Turn the lever rod ① in or out until the specified length is obtained.

Lever rod length:
139 ~ 141 mm (5.42 ~ 5.55 in)

- Tighten the locknuts.

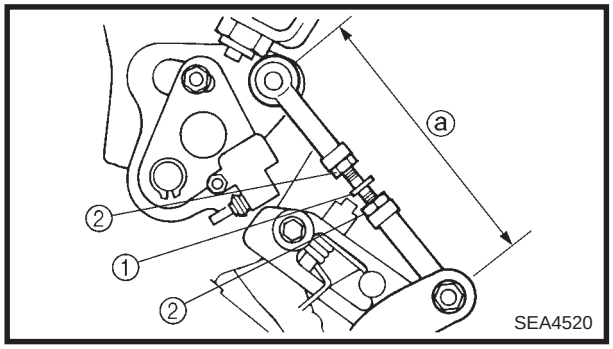

4. Install:
   - Shift rod ①
5. Adjust:
   - Shift rod length ⓐ

Adjustment steps:

- Move the shift lever to the “FWD.” position.
- Loosen the locknuts ②.
- Turn the shift rod ① so that shift rod free play is 0 mm (in direction where ⓐ can be shortened appropriately) and then turn back the shift rod 1/4 turns.
- Tighten the locknuts.

6. Fill:
   - Drive chain housing oil
     Refer to “DRIVE CHAIN” in CHAPTER 2.
7. Adjust:
   - Drive chain slack
     Refer to “DRIVE CHAIN” in CHAPTER 2.

JACKSHAFT

A: 8.5 Nm (0.85 m · kg, 6.1 ft · lb)

B: 23 Nm (2.3 m · kg, 17 ft · lb)

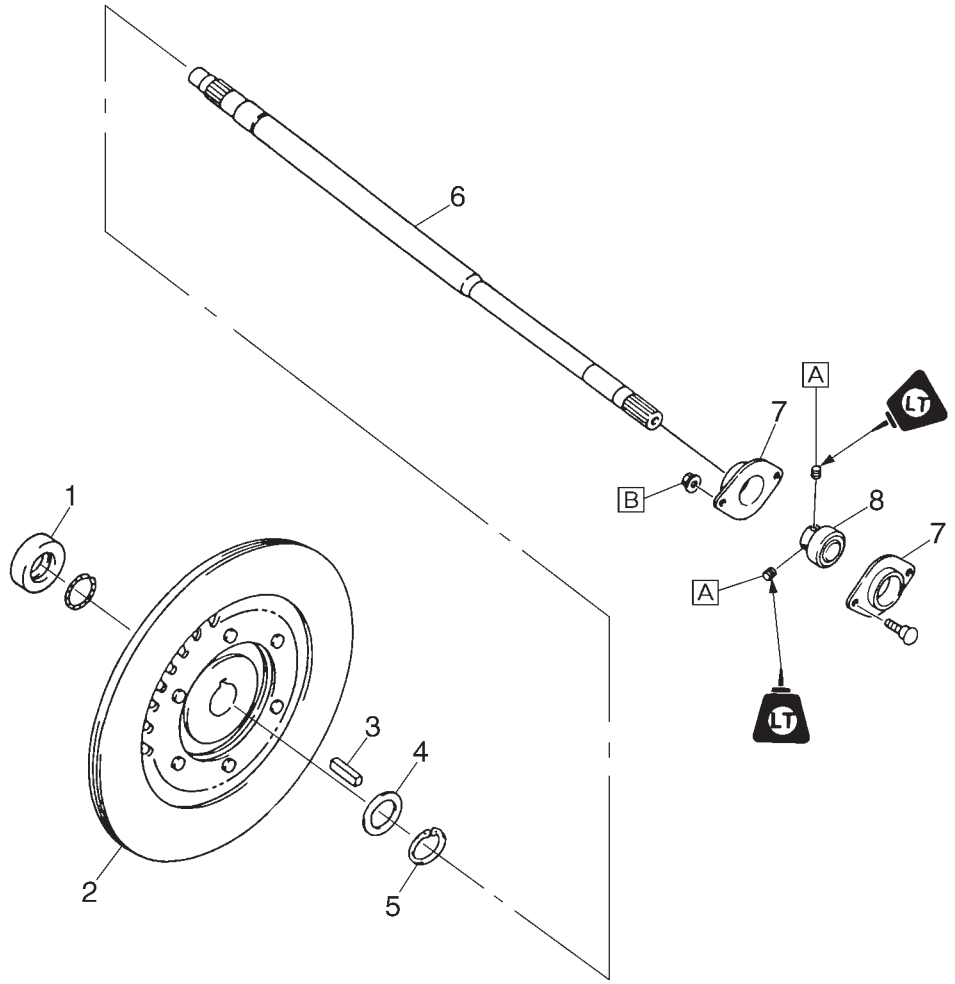

SEA4530

Order	Job name/Part name	Q'ty	Remarks
	Jackshaft removal		Remove the parts in the order listed below.
	Secondary sheave		Refer to "SECONDARY SHEAVE".
	Silencer		Refer to "FUEL PUMP" in CHAPTER 7.
	Drive chain housing		Refer to "DRIVE CHAIN HOUSING".
1	Collar	1	
2	Brake disc	1	
3	Key	1	
4	Washer	1	
5	Circlip	1	
6	Jackshaft	1	
7	Bearing holder	2	
8	Bearing	1	
			For installation, reverse the removal procedure.

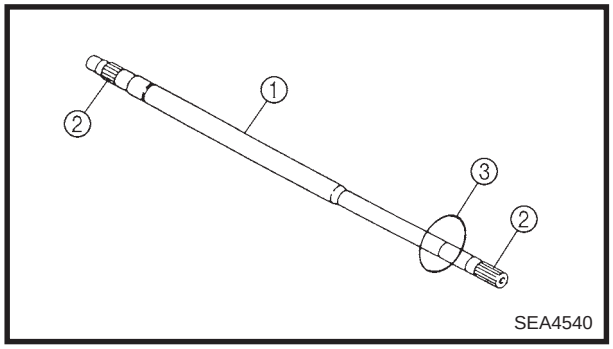

INSPECTION

1. Inspect:
   - Jackshaft ①
     Scratches (excessive)/damage → Replace.
   - Splines ②
     Wear/damage → Replace the jackshaft.
   - Bearing contact surface ③
     Scratches/wear/damage → Replace the jackshaft.

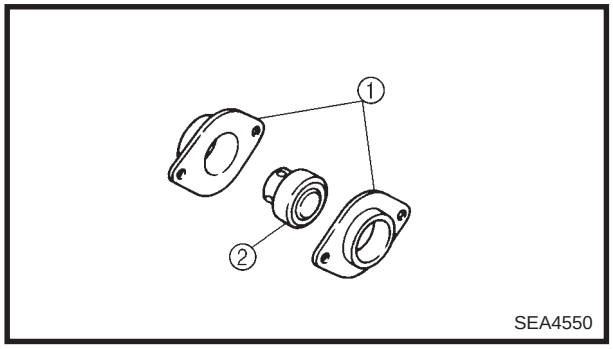

2. Inspect:
   - Bearing holder ①
     Cracks/damage → Replace.
   - Bearing ②
     Pitting/damage → Replace.

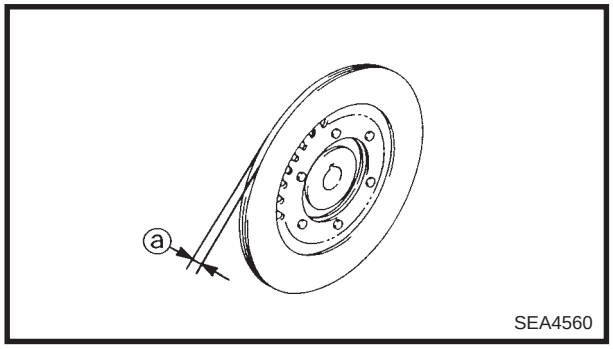

3. Measure:
   - Brake disc thickness ⓐ
     Out of specification → Replace.

	Brake disc thickness limit (minimun): 9.5 mm (0.37 in)

Measuring point: 1 ~ 3 mm (0.04 ~ 0.12 in) from the edge of the brake disc.

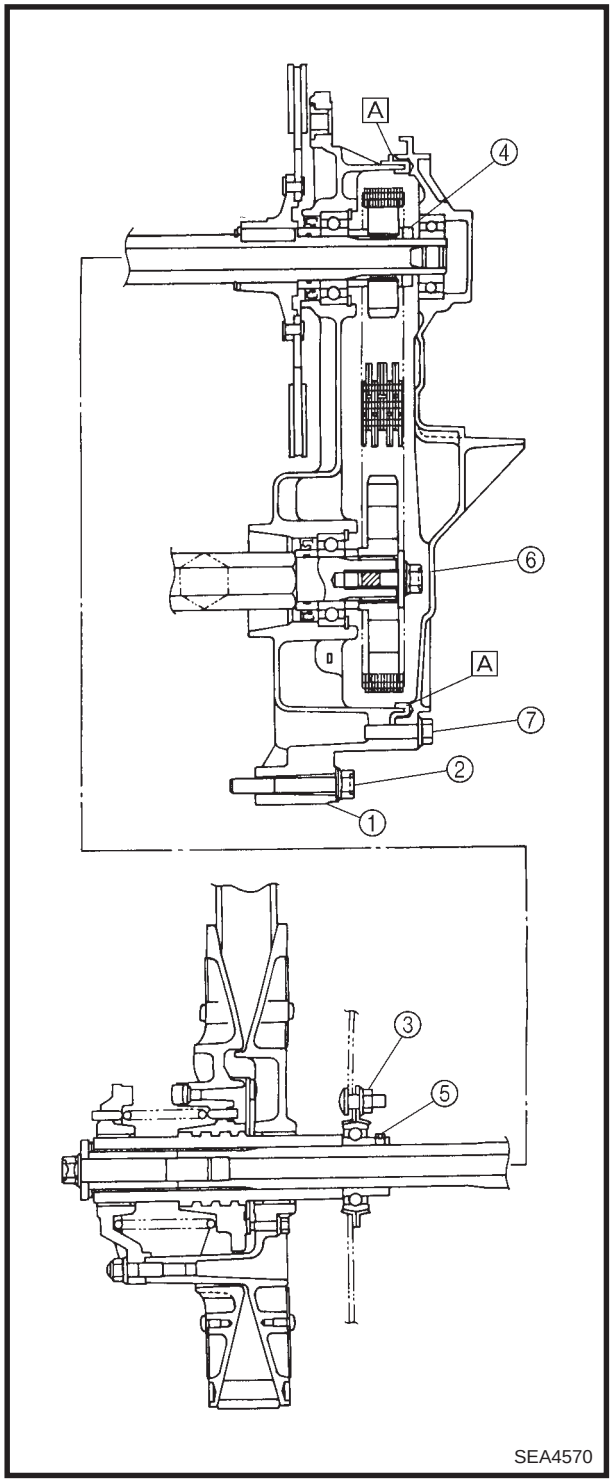

JACKSHAFT AND DRIVE CHAIN HOUSING INSTALLATION

1. Install:
   - Drive chain housing
   - Jackshaft

Installation steps:

- Install the drive chain housing ①.
- Tighten the bolts ②.

	Bolt (drive chain housing): **48 Nm (4.8 m · kg, 35 ft · lb)**

- Temporarily tighten the nuts ③.
- Tighten the nuts ④.

	Nut (jackshaft): **60 Nm (6.0 m · kg, 43 ft · lb)**

- Retighten the nuts ③.

	Nut (bearing holder): **23 Nm (2.3 m · kg, 17 ft · lb)**

- Tighten the set screws ⑤.

	Set screw (bearing): **8.5 Nm (0.85 m · kg, 6.1 ft · lb)** **LOCTITE®**

- Install the drive chain housing cover ⑥.

A Properly install the rubber seal onto the drive chain housing, making sure that these are no gaps.

- Tighten the bolts ⑦.

	Bolt (drive chain housing cover): **24 Nm (2.4 m · kg, 17 ft · lb)**

BRAKE

A: 6 Nm (0.6 m · kg, 4.3 ft · lb)

B: 48 Nm (4.8 m · kg, 35 ft · lb)

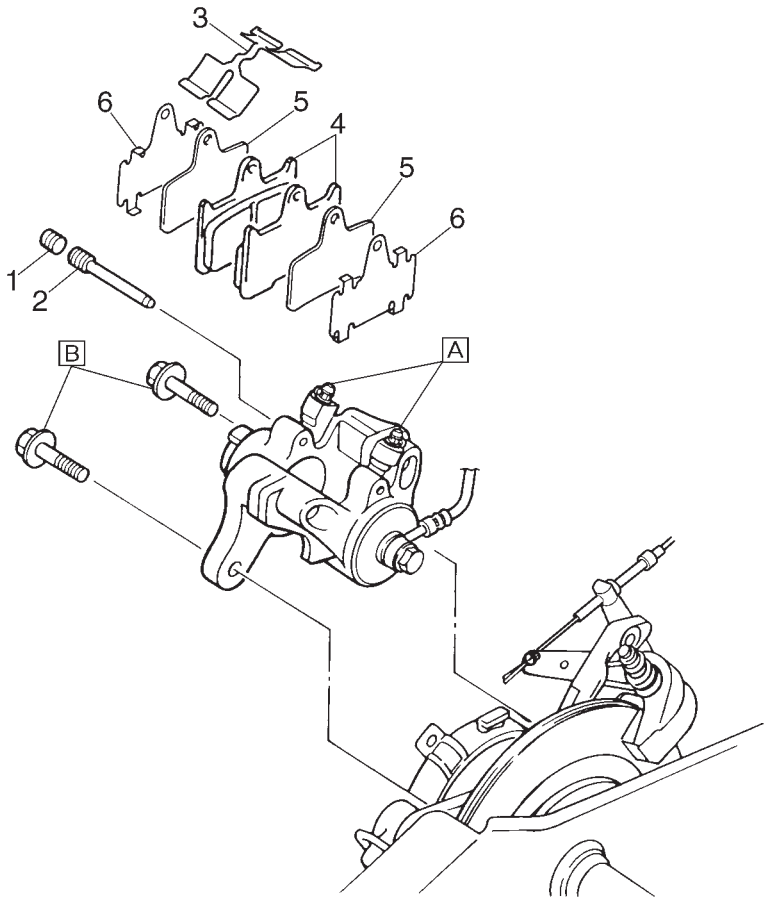

SEA4580

Order	Job name/Part name	Q'ty	Remarks
	Brake pad removal		Remove the parts in the order listed below.
1	Cap bolt	1	
2	Retaining pin	1	
3	Pad spring	1	
4	Brake pad	2	
5	Shim 1	2	
6	Shim 2	2	
			For installation, reverse the removal procedure.

CAUTION:

Disc brake components rarely require disassembly. DO NOT:

- **Do not disassemble components unless absolutely necessary.**
- **Do not use solvents on internal brake components.**
- **Do not use contaminated brake fluid for cleaning.**
  Use only clean brake fluid.
- **Do not allow brake fluid to contact the eyes, otherwise eye injury may occur.**
- **Do not allow brake fluid to contact painted surfaces or plastic parts otherwise damage may occur.**
- **Do not disconnect any hydraulic connection, otherwise the entire system must be disassembled, drained, cleaned, and then properly filled and bled after reassembly.**

BRAKE PAD REPLACEMENT

NOTE:

It is not necessary to disassemble the brake caliper and brake hose in order to replace the brake pads.

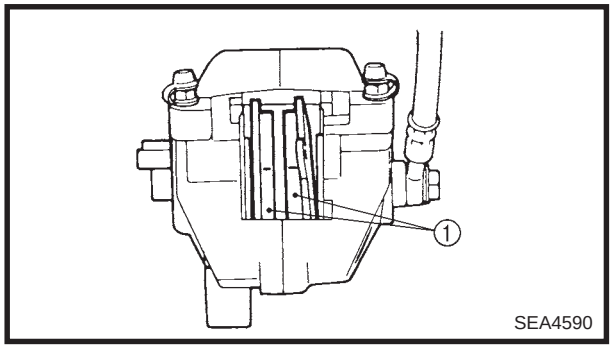

1. Remove:
   - Brake pads ①

NOTE:

- Do not depress the brake lever when the caliper or disc is off the machine otherwise the brake pads will be forced shut.
- Install a new brake pad spring and shims when the brake pads are replaced.
- Replace the pads as a set if either one is found to be worn to the wear limit ⓐ.

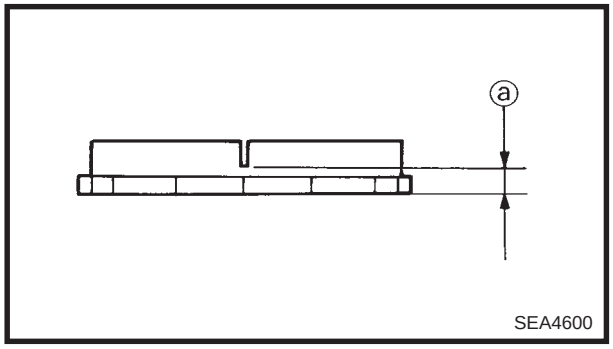

Wear limit:
4.7 mm (0.19 in)

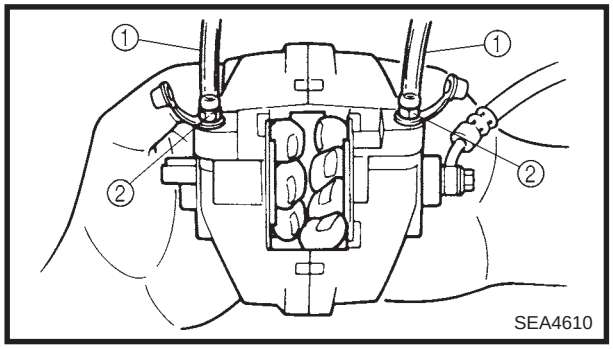

2. Install:
   - Brake pads
   - Pad spring

Installation steps:

- Connect a suitable hose ① tightly to the caliper bleed screw ②. Put the other end of this hose into an open container.
- Loosen the caliper bleed screw and push the pistons into the caliper with your finger.
- Tighten the caliper bleed screw ②.

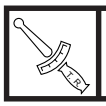	**Bleed screw:** **6 Nm (0.6 m · kg, 4.3 ft · lb)**

- Install the brake pads and pad spring.

3. Inspect:
   - Brake fluid level
     Refer to "BRAKE FLUID LEVEL INSPECTION" in CHAPTER 2.
4. Check:
   - Brake lever operation
     A soft or spongy feeling → Bleed brake system.
     Refer to "AIR BLEEDING (HYDRAULIC BRAKE SYSTEM)" in CHAPTER 2.

A: 30 Nm (3.0 m · kg, 22 ft · lb)

B: 48 Nm (4.8 m · kg, 35 ft · lb)

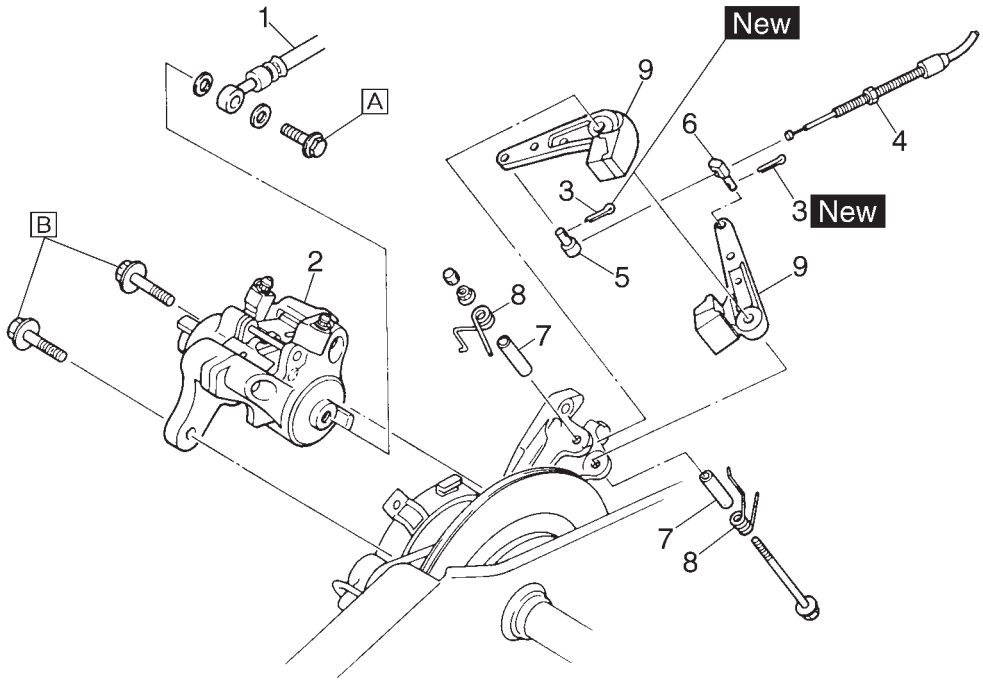

SEA4620

Order	Job name/Part name	Q'ty	Remarks
	Brake caliper and parking brake removal		Remove the parts in the order listed below.
	Brake fluid		Drain.
1	Brake hose	1	
2	Brake caliper assembly	1	
3	Cotter pin	2	
4	Parking brake cable	1	
5	Pin	1	
6	Pin	1	
7	Collar	2	
8	Spring	2	
9	Brake shoe	2	
			For installation, reverse the removal procedure.

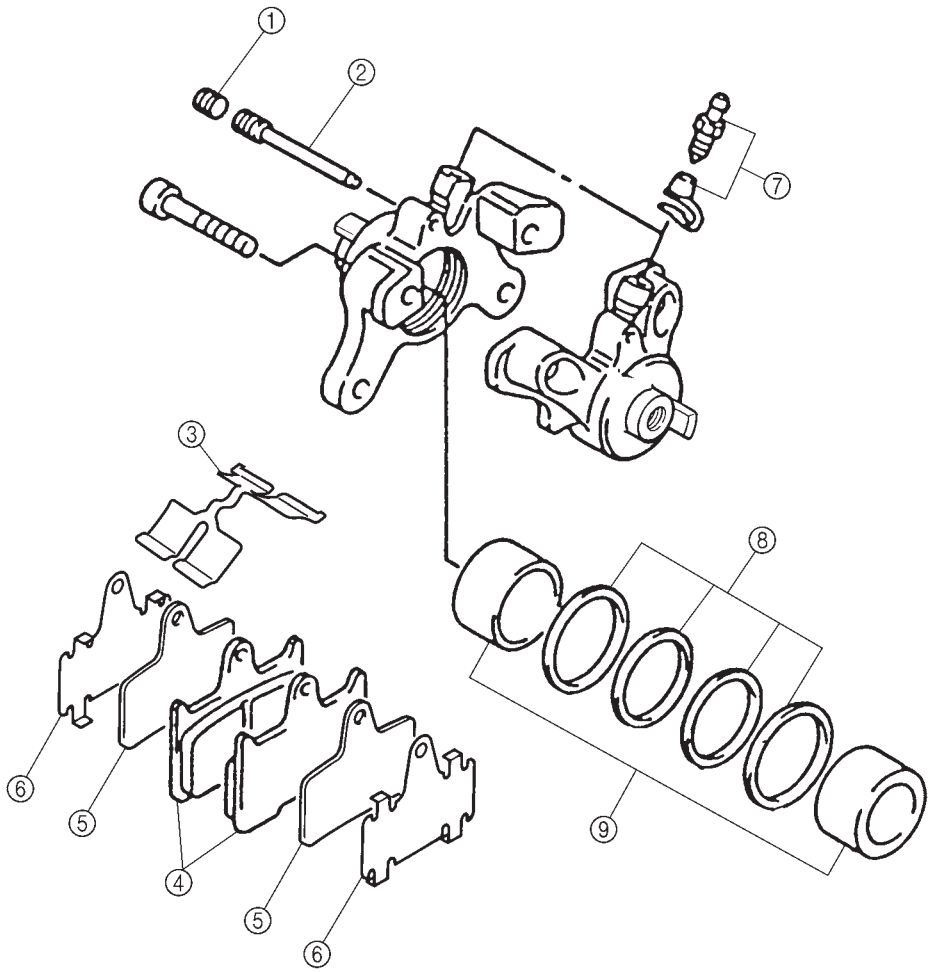

SEA4630

Order	Job name/Part name	Q'ty	Remarks
	Brake caliper disassembly		Remove the parts in the order listed below.
①	Cap bolt	1	
②	Retaining pin	1	
③	Pad spring	1	
④	Brake pad	2	
⑤	Shim 1	2	
⑥	Shim 2	2	
⑦	Bleed screw	2	
⑧	Piston seal	4	
⑨	Piston	2	
			For assembly, reverse the disassembly procedure.

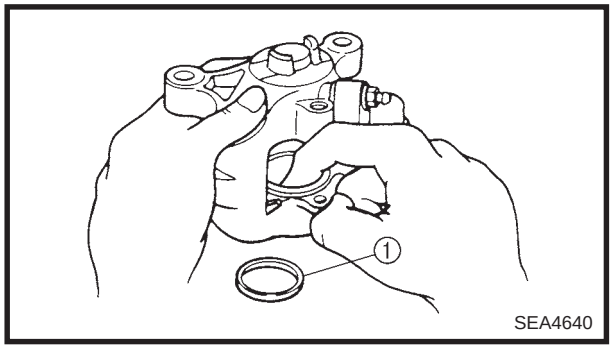

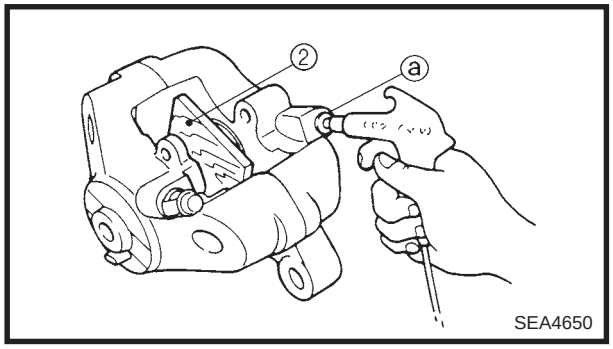

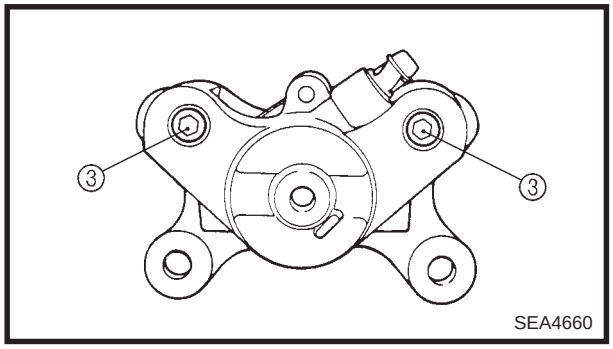

BRAKE CALIPER DISASSEMBLY

NOTE:

Before disassembling a caliper, drain brake fluid from brake hose, master cylinder, brake caliper and brake reservoir of their brake fluid.

1. Remove:
   - Pistons
   - Piston seals ①

Removal steps:

- Using a wood of piece ②, lock the right piston.
- Blow compressed air into the hose joint opening ⓐ to force out the left piston from the caliper body.
- Remove the piston seals and reinstall the piston.
- Repeat the previous steps to force out the right piston from the caliper body.

⚠ WARNING

- **Never try to pry out the pistons.**
- **Do not loosen the retaining pin ③.**

BRAKE CALIPER INSPECTION AND REPAIR

Recommended brake component replacement schedule	
Brake pads	**As required**
Piston seals and dust seals	**Every two years**
Brake hose	**Every two years**
Brake fluid	**Only when brakes are disassembled.**

⚠ WARNING

All internal brake components should be cleaned only with new brake fluid. Do not use solvents as they will cause seals to swell and distort.

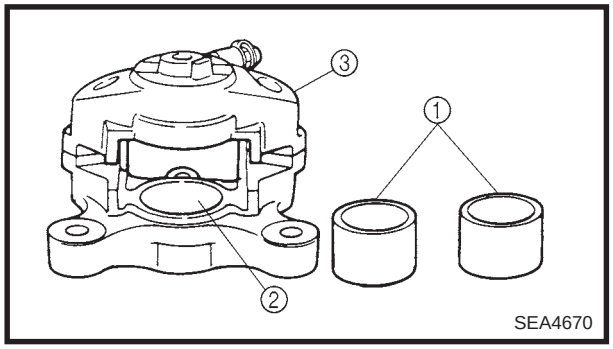

1. Inspect:
   - Caliper piston ①
     Scratches/rust/wear → Replace the caliper assembly.
   - Caliper cylinder ②
     Wear/scratches → Replace the caliper assembly.
   - Caliper body ③
     Cracks/damage → Replace.
   - Oil delivery passage (caliper body)
     Blow out with compressed air.

⚠ WARNING

Replace the piston seals and dust seals whenever a caliper is disassembled.

BRAKE CALIPER ASSEMBLY

⚠ WARNING

- **All internal parts should be cleaned only with new brake fluid.**
- **Internal parts should be lubricated with brake fluid when installed.**

Recommended brake fluid:
DOT 4

- **Replace the piston seals and dust seals whenever a caliper is disassembled.**

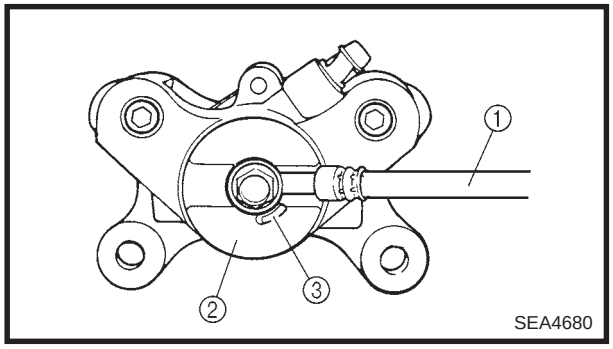

BRAKE CALIPER INSTALLATION

1. Install:
   - Brake hose ①

CAUTION:

When installing the brake hose ① onto the brake caliper ②, make sure that the brake pipe touches the projection ③ on the brake caliper.

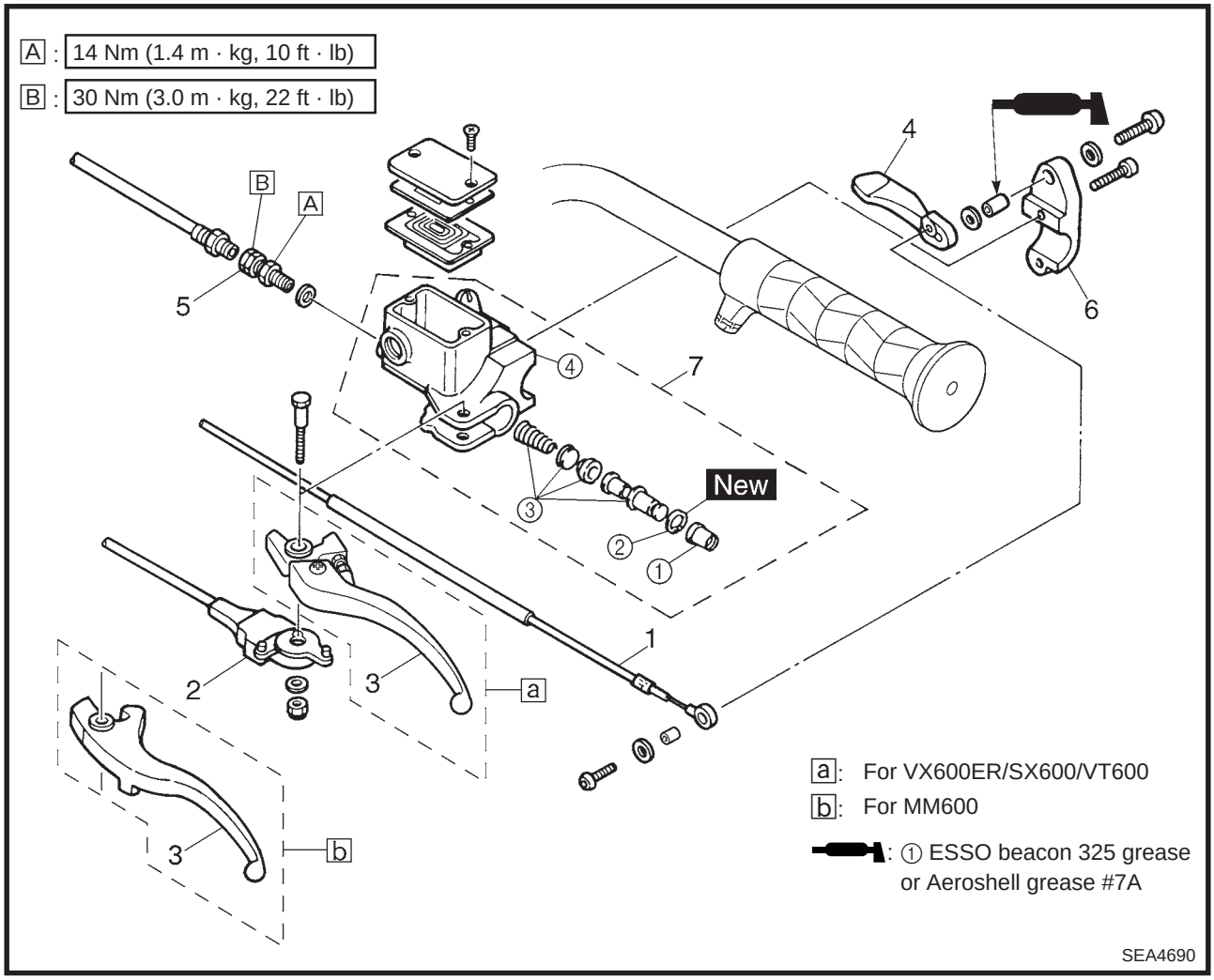

Order	Job name/Part name	Q'ty	Remarks
	Brake master cylinder removal		Remove the parts in the order listed below.
	Brake fluid		Drain.
1	Parking brake cable	1	
2	Brake light switch	1	
3	Brake lever	1	
4	Parking brake lever	1	
5	Brake hose joint	1	
6	Holder	1	
7	Master cylinder assembly	1	
			For installation, reverse the removal procedure.
	Brake master cylinder disassembly		Remove the parts in the order listed below.
①	Boot	1	
②	Circlip	1	
③	Master cylinder kit	1	
④	Master cylinder body	1	
			For assembly, reverse the disassembly procedure.

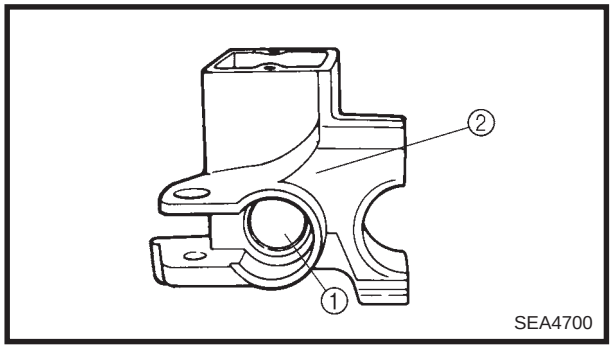

INSPECTION

1. Inspect:
   - Master cylinder ①
     Wear/scratches → Replace the master cylinder assembly.
   - Master cylinder body ②
     Cracks/damage → Replace.
   - Oil delivery passage (master cylinder body)
     Blow out with compressed air.

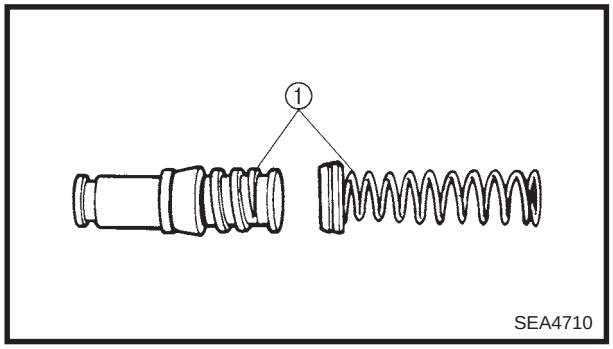

2. Inspect:
   - Master cylinder kit ①
     Scratches/wear/damage → Replace as a set.

BRAKE MASTER CYLINDER ASSEMBLY

⚠ WARNING

- **All internal parts should be cleaned only with new brake fluid.**
- **Internal parts should be lubricated with brake fluid when installed.**

Recommended brake fluid:
DOT 4

- **Replace the piston seals and dust seals whenever a caliper is disassembled.**

INSTALLATION

1. Connect:
   - Brake hose

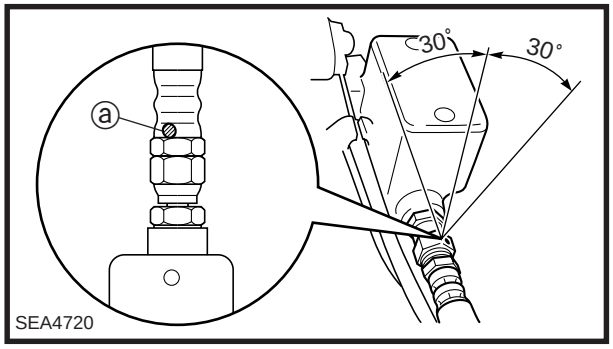

NOTE:

Install the brake hose with the mark ⓐ facing upwards, as shown in the diagram.

Brake hose joint:
Brake master cylinder side
14 Nm (1.4 m · kg, 10 ft · lb)
Brake hose side
30 Nm (3.0 m · kg, 22 ft · lb)

SLIDE RAIL SUSPENSION

VX600ER/SX600

A: 72 Nm (7.2 m · kg, 52 ft · lb)

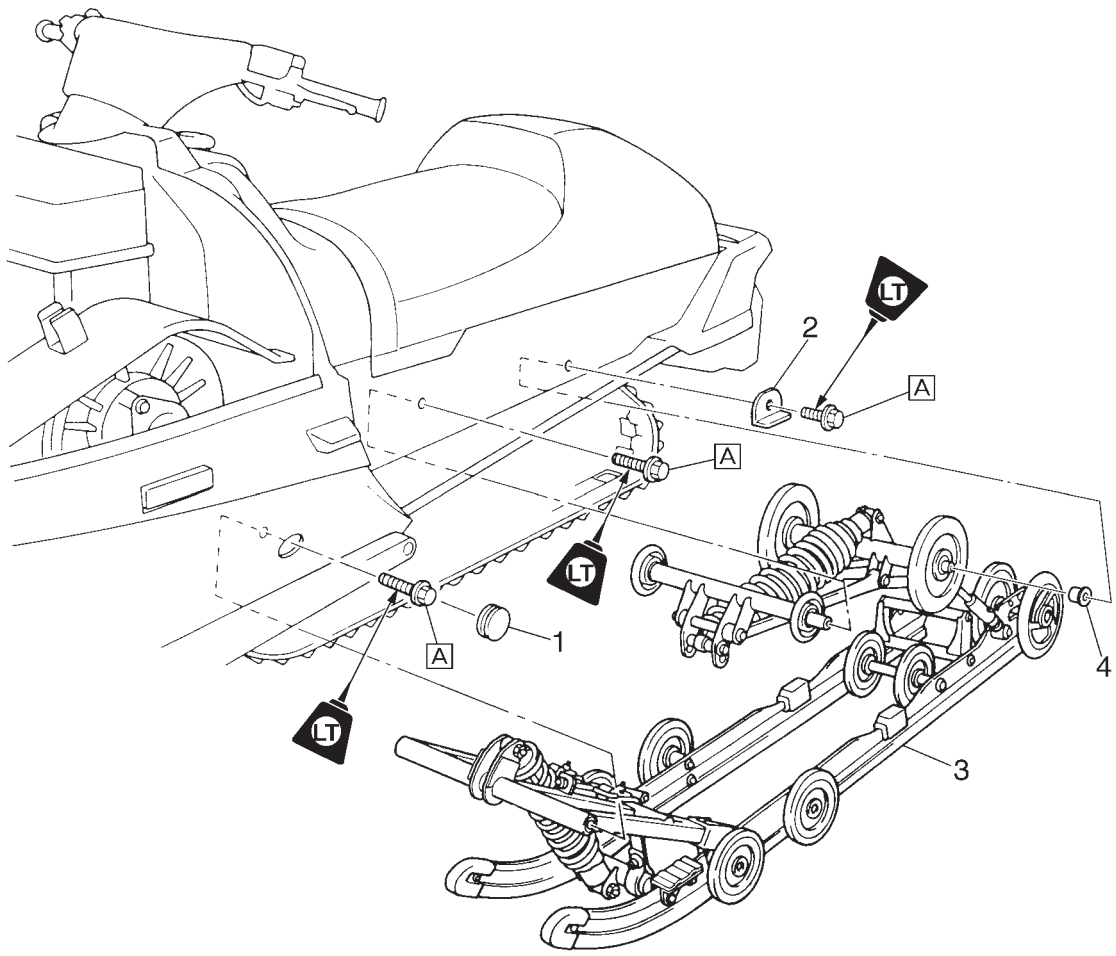

SEA4730

Order	Job name/Part name	Q'ty	Remarks
	Slide rail suspension removal		Remove the parts in the order listed below.
	Rear axle nut		Loosen.
	Tension adjuster		Loosen.
1	Blind cap	2	
2	Suspension rear plate	2	
3	Slide rail suspension	1	
4	Collar	2	
			For installation, reverse the removal procedure.

VT600

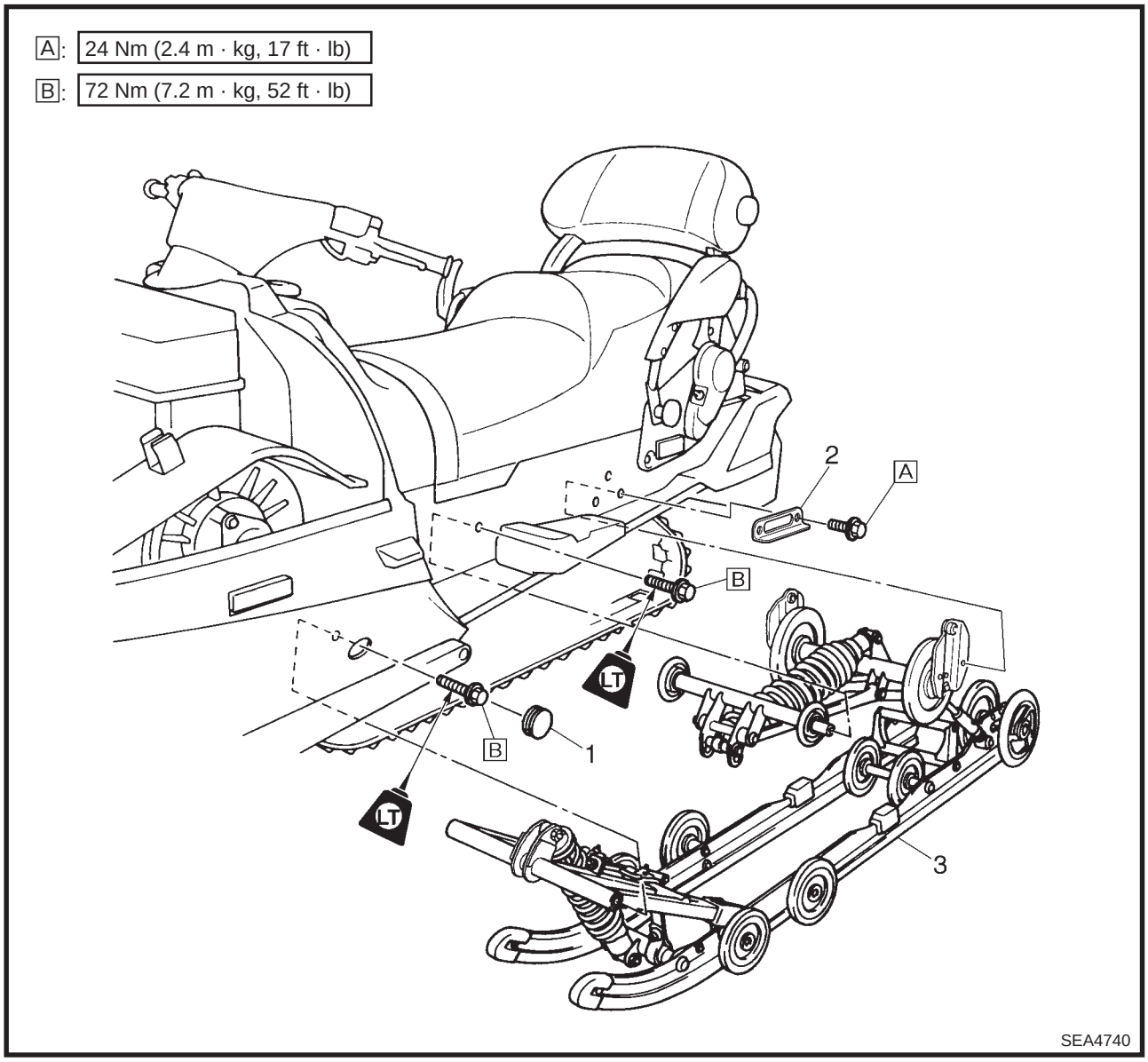

Order	Job name/Part name	Q'ty	Remarks
	Slide rail suspension removal		Remove the parts in the order listed below.
	Rear axle nut		Loosen.
	Tension adjuster		Loosen.
1	Blind cap	2	
2	Suspension rear plate	2	
3	Slide rail suspension	1	
			For installation, reverse the removal procedure.

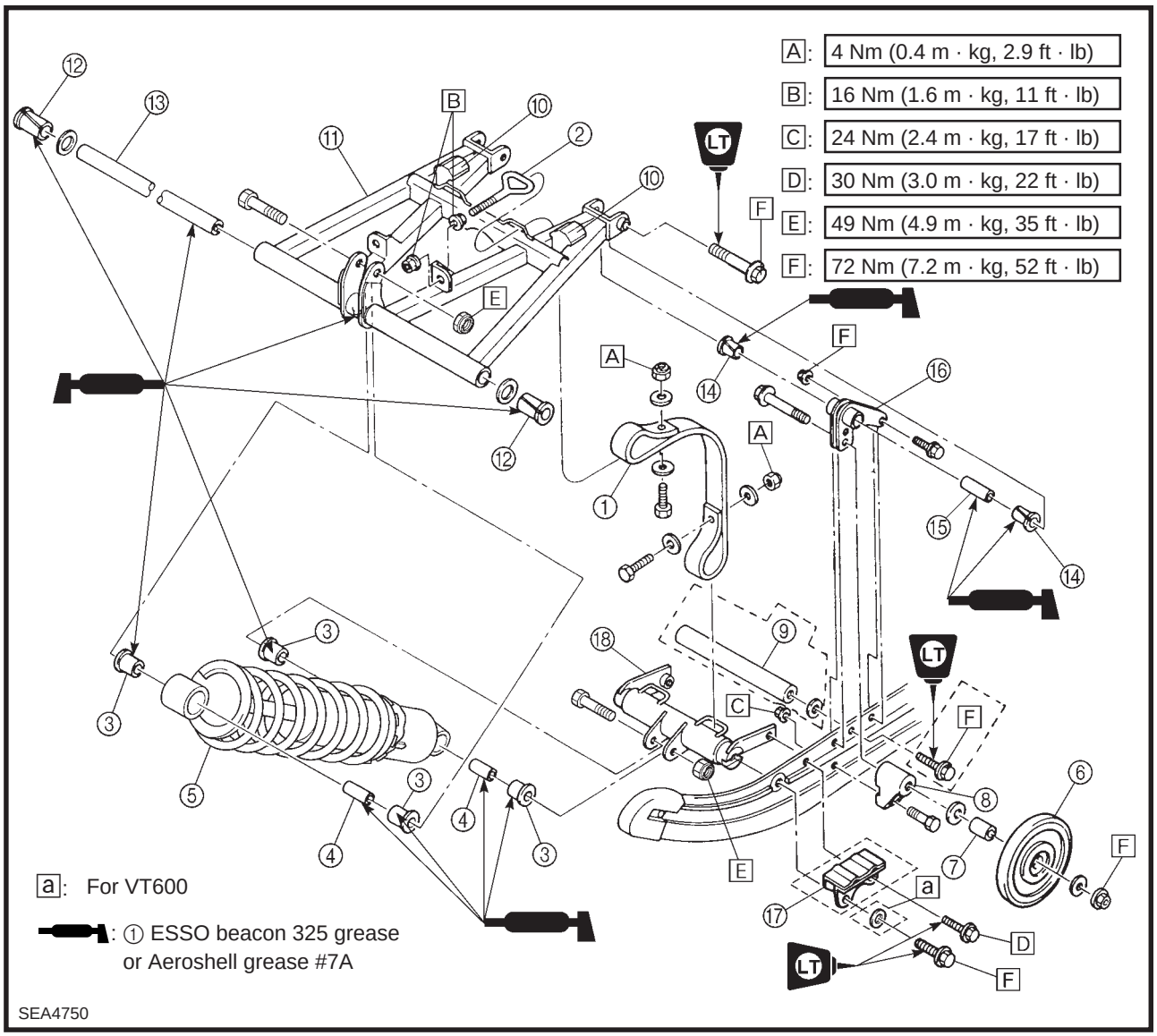

Order	Job name/Part name	Q'ty	Remarks
	Slide rail suspension disassembly		Remove the parts in the order listed below.
①	Stopper band	2	
②	Hook	2	
③	Bushing	4	
④	Collar	2	
⑤	Front shock absorber	1	
⑥	Suspension wheel	2	
⑦	Collar	2	
⑧	Wheel bracket	2	
⑨	Shaft	1	(VT600)
⑩	Rubber damper	2	(VX600ER/SX600)
⑪	Front pivot arm	1	
⑫	Bushing	2	
⑬	Collar	1	
⑭	Bushing	4	
⑮	Collar	2	
⑯	Front pivot arm bracket	2	
⑰	Bracket	2	(VX600ER/SX600)
⑱	Front suspension bracket	1	

A: 24 Nm (2.4 m · kg, 17 ft · lb)

B: 49 Nm (4.9 m · kg, 35 ft · lb)

C: 72 Nm (7.2 m · kg, 52 ft · lb)

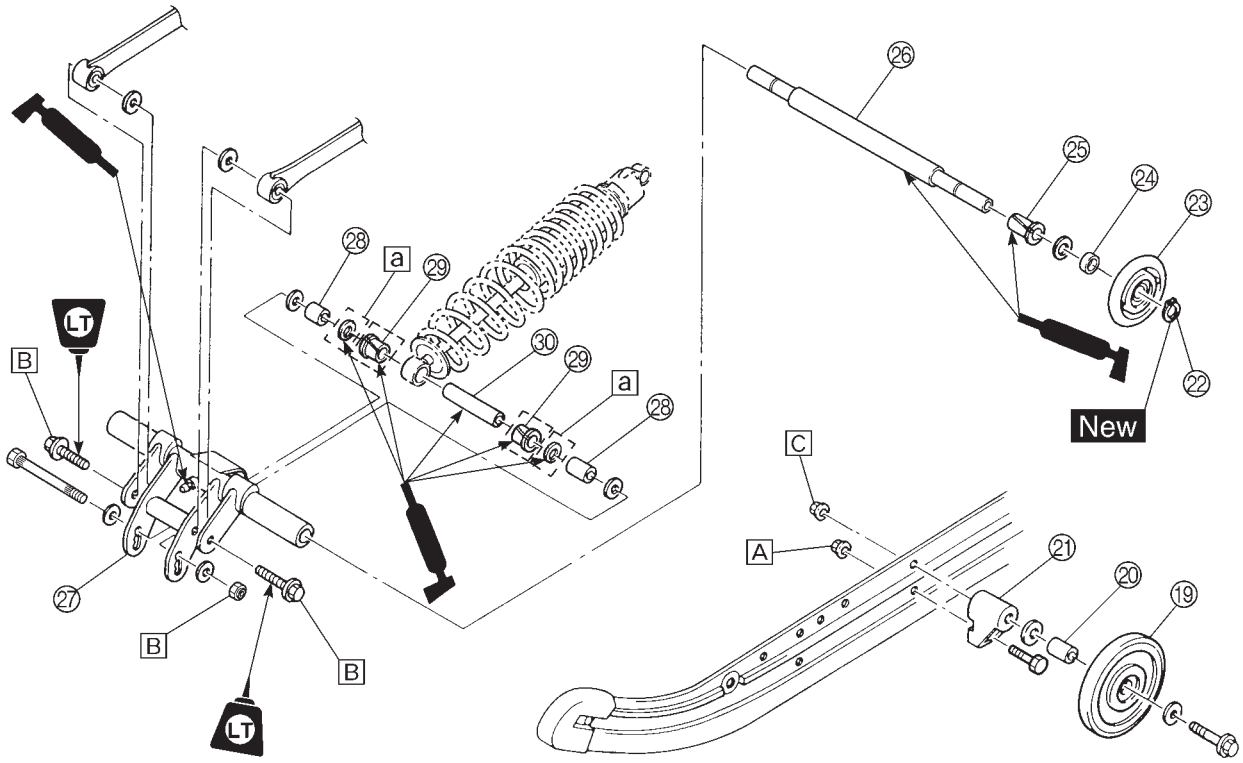

a: For SX600

: ① ESSO beacon 325 grease or Aeroshell grease #7A

SEA4760

Order	Job name/Part name	Q'ty	Remarks
⑲	Suspension wheel	2	
⑳	Collar	2	
㉑	Wheel bracket	2	
㉒	Circlip	2	
㉓	Suspension wheel	2	
㉔	Spacer	2	
㉕	Bushing	2	
㉖	Collar	1	
㉗	Rear suspension bracket	1	
㉘	Spacer	2	
㉙	Bushing	2	(VX600ER/VT600)
㉚	Collar	1	

A: 49 Nm (4.9 m · kg, 35 ft · lb)

B: 72 Nm (7.2 m · kg, 52 ft · lb)

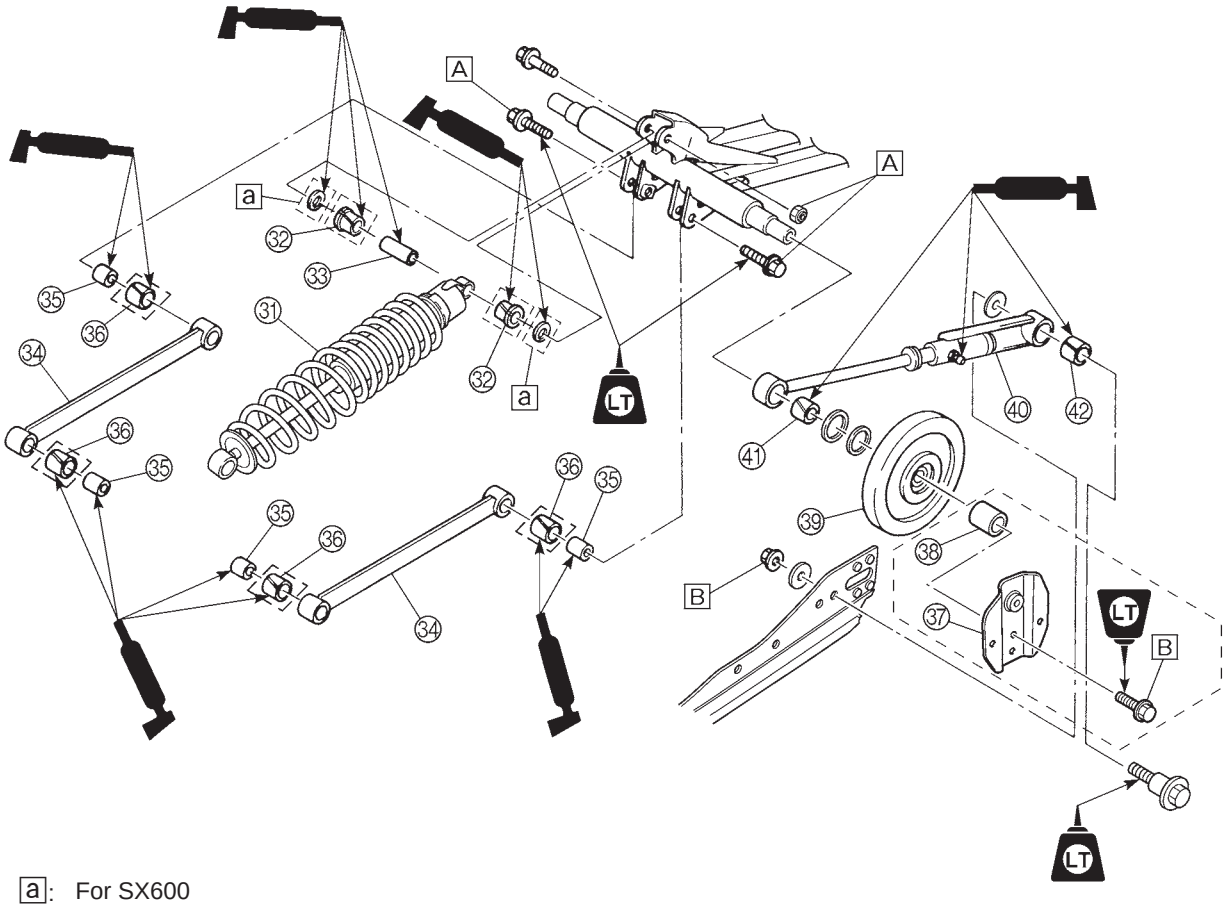

a: For SX600

: ① ESSO beacon 325 grease or Aeroshell grease #7A

SEA4770

Order	Job name/Part name	Q'ty	Remarks
㉛	Rear shock absorber	1	
㉜	Bushing	2	(VX600ER/VT600)
㉝	Collar	1	
㉞	Pull rod	2	
㉟	Collar	4	
㊱	Bushing	4	(VX600ER/VT600)
㊲	Rear bracket	2	(VT600)
㊳	Collar	2	(VT600)
㊴	Suspension wheel	2	
㊵	Control rod	2	
㊶	Bushing	2	
㊷	Bushing	2	

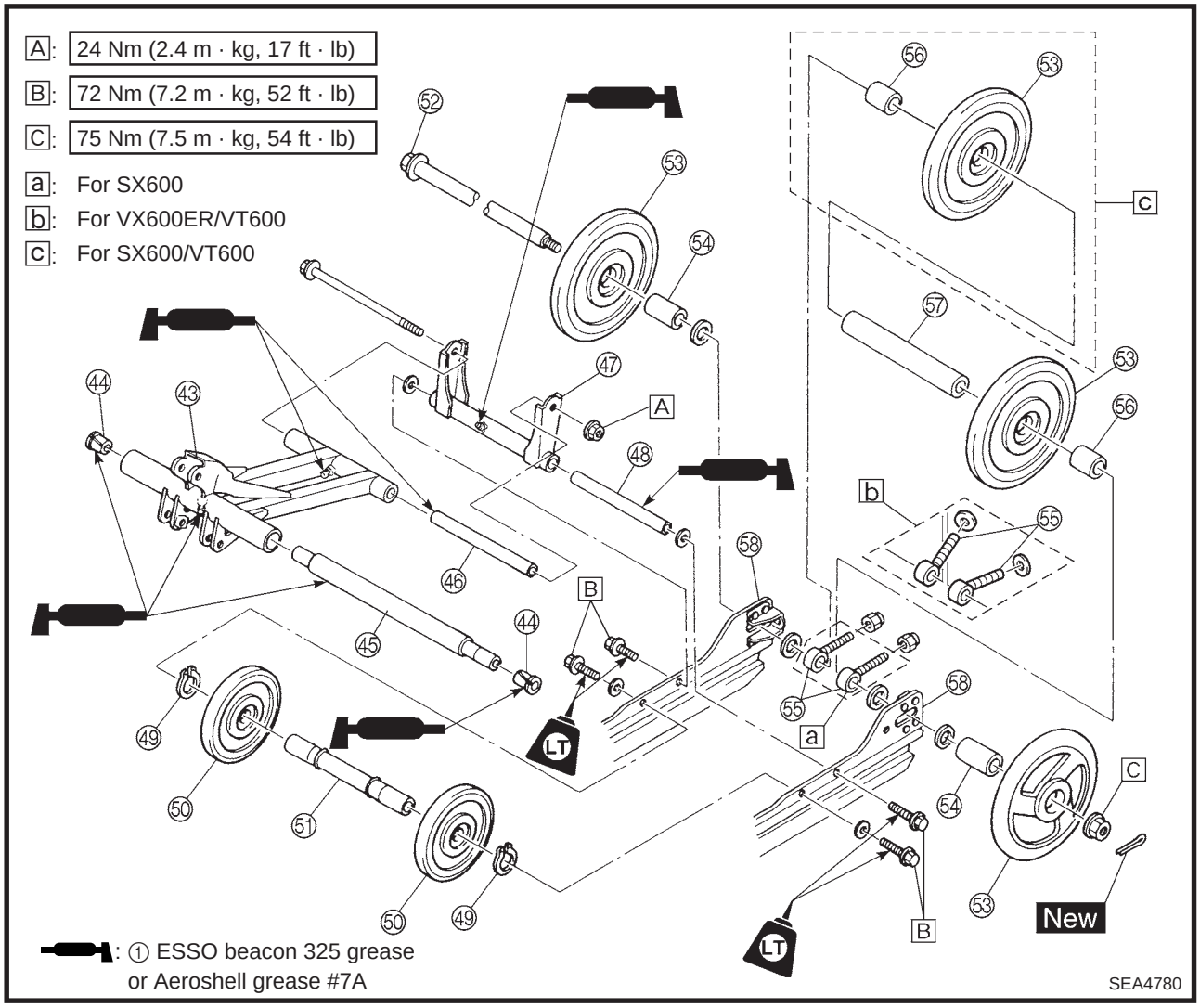

Order	Job name/Part name	Q'ty	Remarks
㊸	Rear pivot arm	1	
㊹	Bushing	2	
㊺	Collar	1	
㊻	Collar	1	
㊼	Rear pivot arm bracket	1	
㊽	Collar	1	
㊾	Circlip	2	
㊿	Suspension wheel	2	
51	Wheel bracket shaft	1	
52	Rear axle	1	
53	Guide wheel	3 (4)	
54	Collar	2	
55	Tension adjuster	2	
56	Collar	1 (2)	
57	Collar	1	
58	Sliding frame	2	
			For assembly, reverse the disassembly procedure.

MM600

A: 72 Nm (7.2 m · kg, 52 ft · lb)

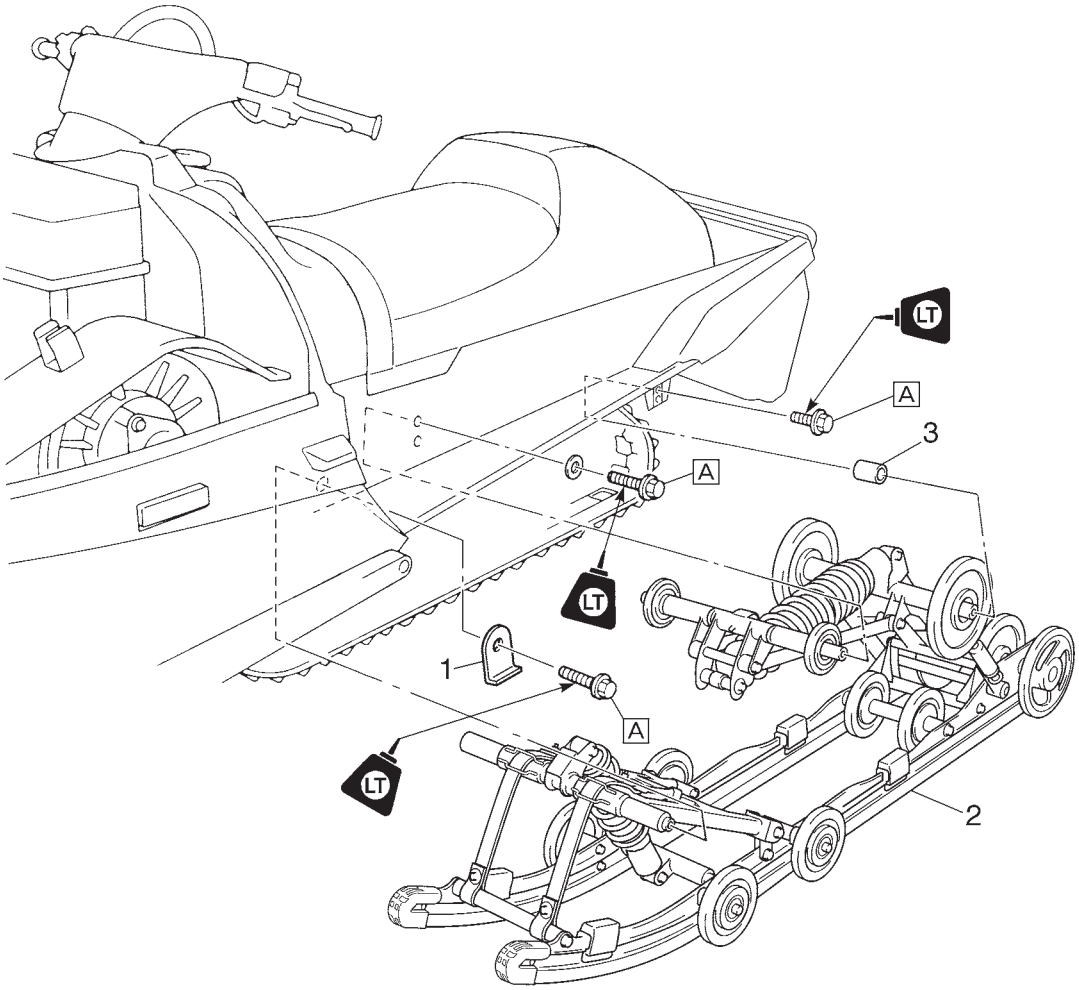

SEA4790

Order	Job name/Part name	Q'ty	Remarks
	Slide rail suspension removal		Remove the parts in the order listed below.
	Rear axle nut		Loosen.
	Tension adjuster		Loosen.
1	Suspension rear plate	2	
2	Slide rail suspension	1	
3	Collar	2	
			For installation, reverse the removal procedure.

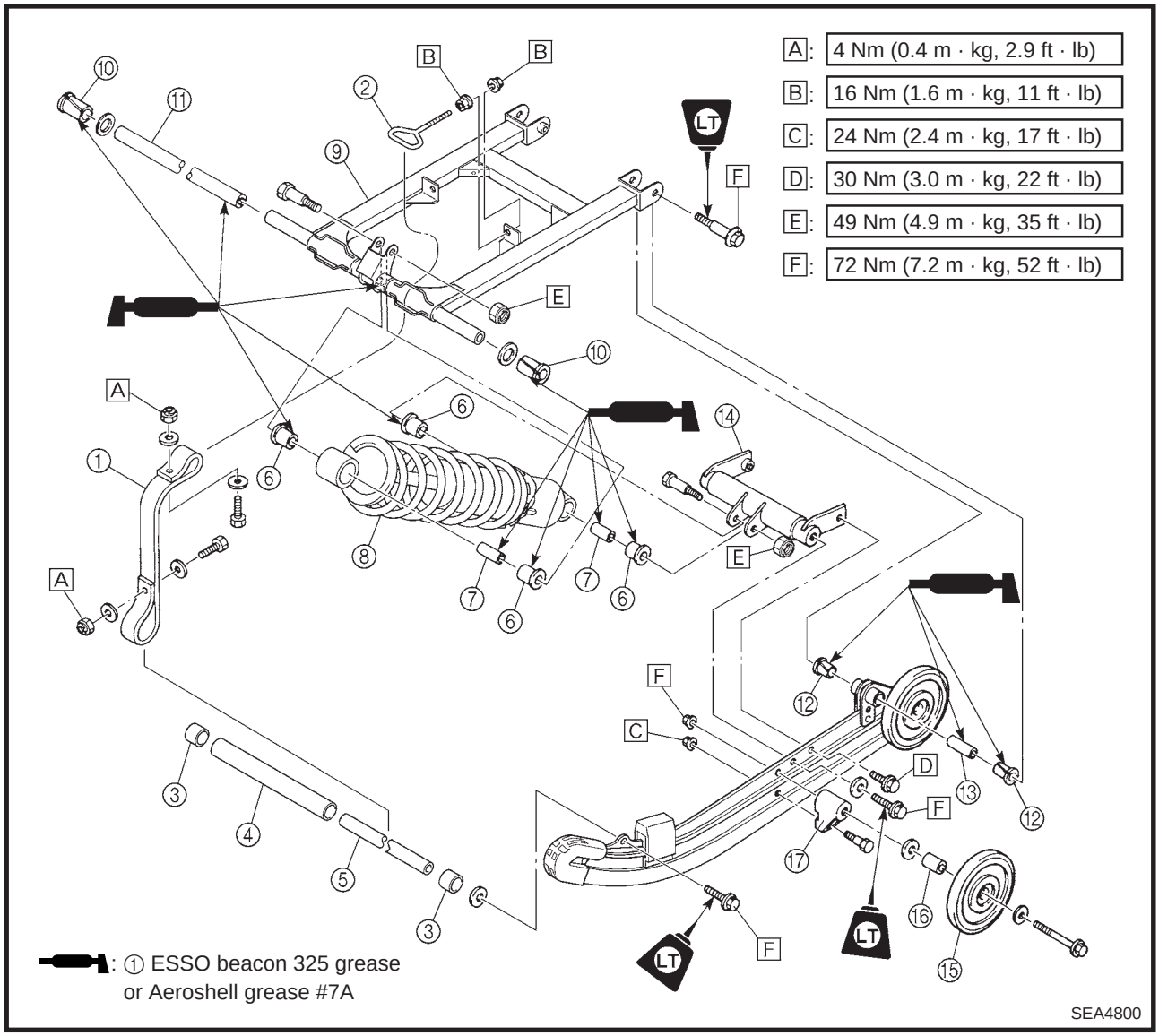

Order	Job name/Part name	Q'ty	Remarks
	Slide rail suspension disassembly		Remove the parts in the order listed below.
①	Stopper band	2	
②	Hook	2	
③	Rubber collar	2	
④	Rubber collar	1	
⑤	Shaft	1	
⑥	Bushing	4	
⑦	Collar	2	
⑧	Front shock absorber	1	
⑨	Front pivot arm	1	
⑩	Bushing	2	
⑪	Collar	1	
⑫	Bushing	4	
⑬	Collar	2	
⑭	Front suspension bracket	1	
⑮	Suspension wheel	2	
⑯	Collar	2	
⑰	Wheel bracket	2	

A: 24 Nm (2.4 m · kg, 17 ft · lb)
B: 49 Nm (4.9 m · kg, 35 ft · lb)
C: 72 Nm (7.2 m · kg, 52 ft · lb)

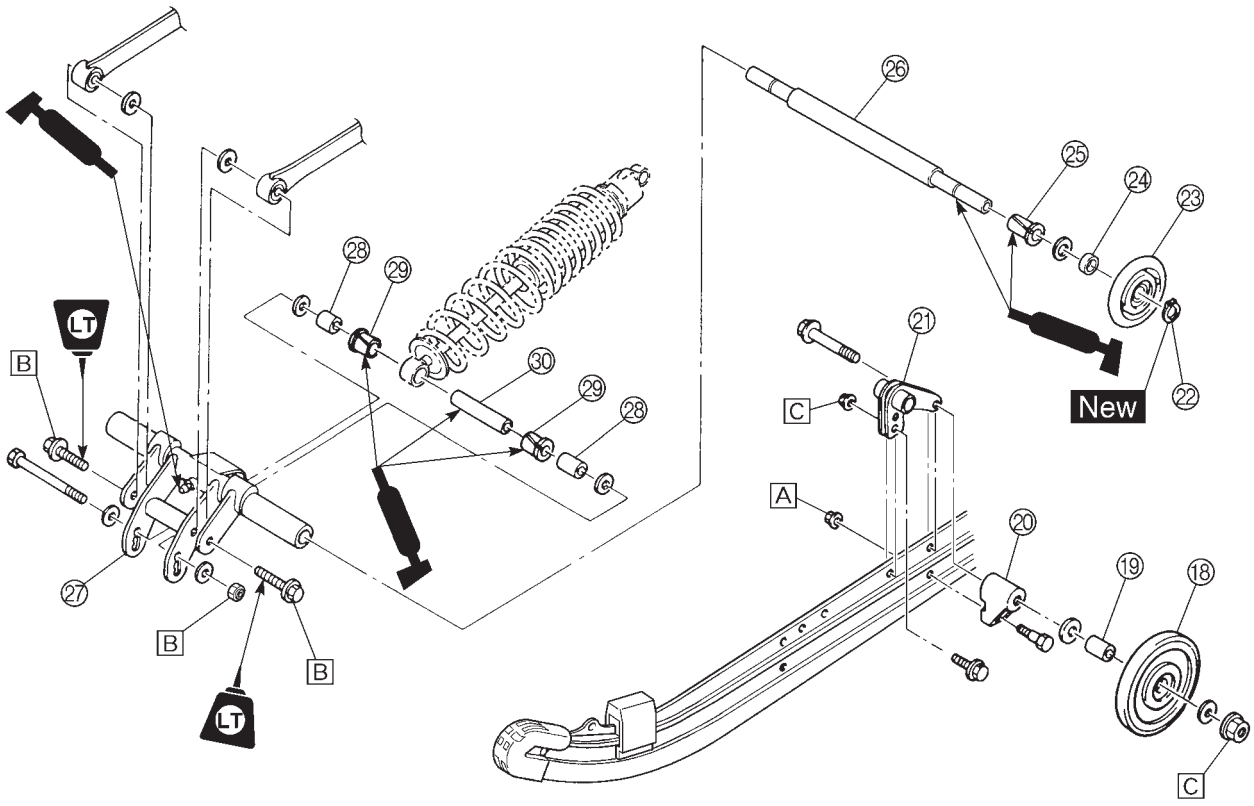

: ① ESSO beacon 325 grease
or Aeroshell grease #7A

SEA4810

Order	Job name/Part name	Q'ty	Remarks
⑱	Suspension wheel	2	
⑲	Collar	2	
⑳	Wheel bracket	2	
㉑	Front pivot arm bracket	2	
㉒	Circlip	2	
㉓	Suspension wheel	2	
㉔	Collar	2	
㉕	Bushing	2	
㉖	Collar	1	
㉗	Rear suspension bracket	1	
㉘	Spacer	2	
㉙	Bushing	2	
㉚	Collar	1	

A: 49 Nm (4.9 m · kg, 35 ft · lb)

B: 72 Nm (7.2 m · kg, 52 ft · lb)

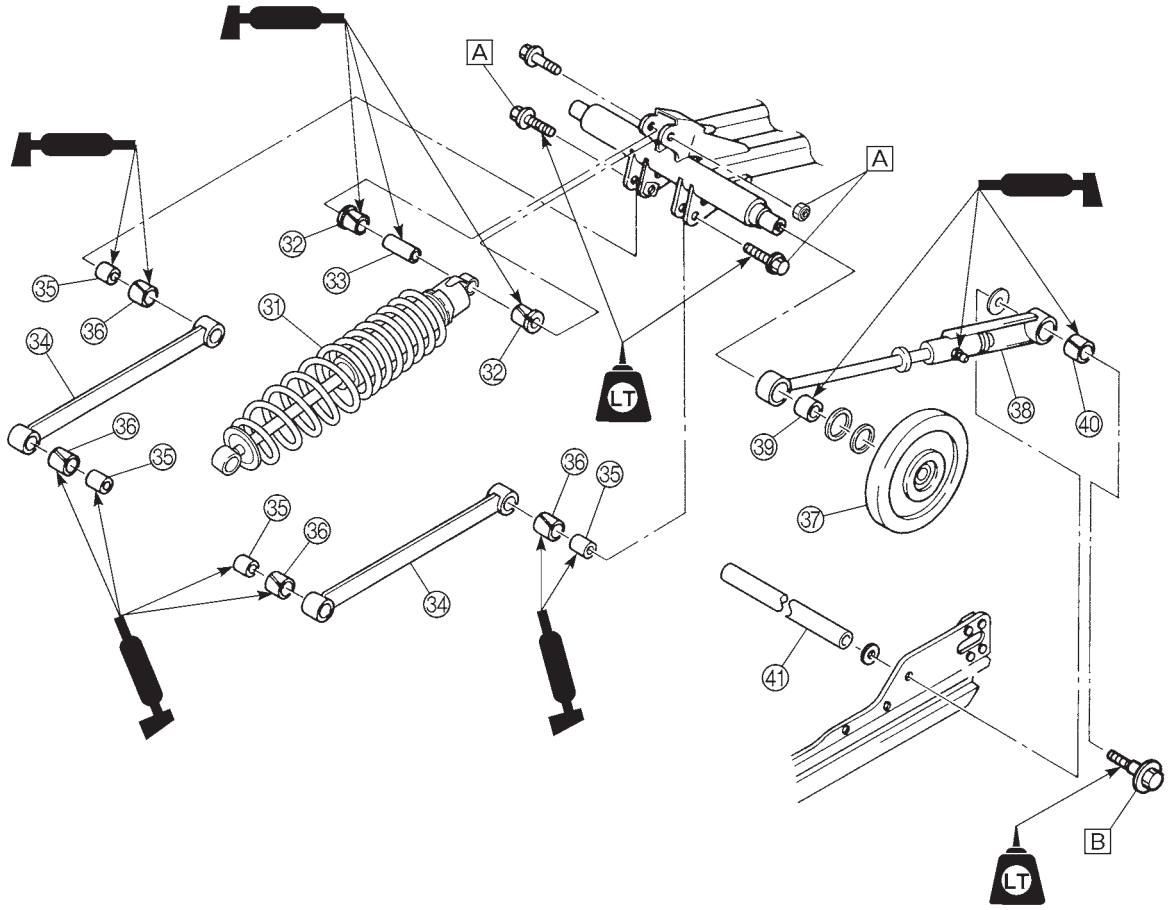

: ① ESSO beacon 325 grease
or Aeroshell grease #7A

SEA4820

Order	Job name/Part name	Q'ty	Remarks
㉛	Rear shock absorber	1	
㉜	Bushing	2	
㉝	Collar	1	
㉞	Pull rod	2	
㉟	Collar	4	
㊱	Bushing	4	
㊲	Suspension wheel	2	
㊳	Control rod	2	
㊴	Bushing	2	
㊵	Bushing	2	
㊶	Shaft	1	

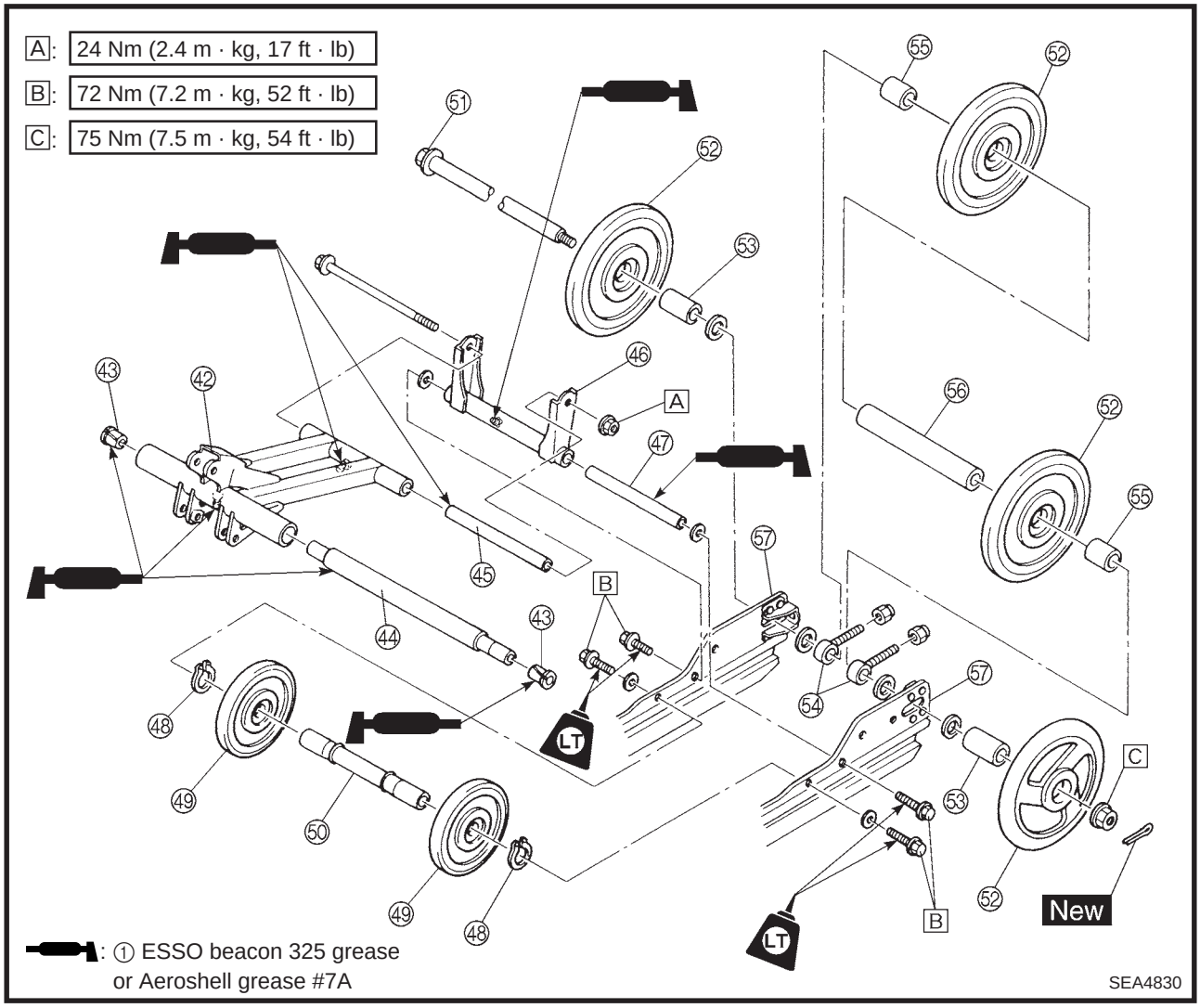

Order	Job name/Part name	Q'ty	Remarks
㊷	Rear pivot arm	1	
㊸	Bushing	2	
㊹	Collar	1	
㊺	Collar	1	
㊻	Rear pivot arm bracket	1	
㊼	Collar	1	
㊽	Circlip	2	
㊾	Suspension wheel	2	
㊿	Wheel bracket shaft	1	
51	Rear axle	1	
52	Guide wheel	4	
53	Collar	2	
54	Tension adjuster	2	
55	Collar	2	
56	Collar	1	
57	Sliding frame	2	
			For assembly, reverse the disassembly procedure.

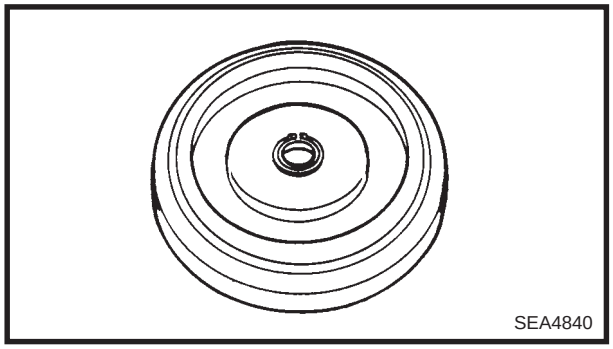

INSPECTION

1. Inspect:
   - Suspension wheel
   - Guide wheel
     Cracks/damage → Replace.
   - Wheel bearing
     Wheel turns roughly → Replace.

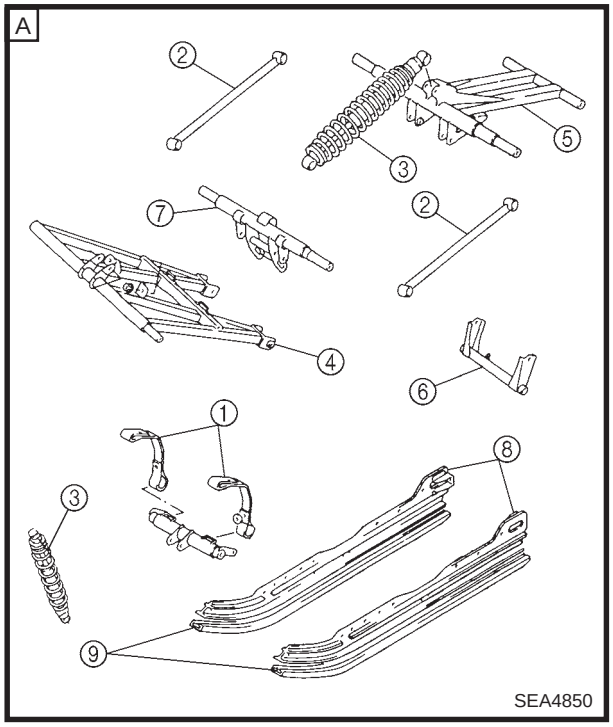

2. Inspect:
   - Stopper band ①
     Frayed/damage → Replace.
   - Pull rod ②
     Bends/damage → Replace.
   - Shock absorber ③
     Oil leaks/damage → Replace.
   - Bushings
     Wear/cracks/damage → Replace.
   - Front pivot arm ④
   - Rear pivot arm ⑤
   - Rear pivot arm bracket ⑥
   - Rear suspension bracket ⑦
   - Sliding frame ⑧
     Cracks/damage → Replace.
   - Slide runner ⑨
     Wear/damage → Replace.

A VX600ER/SX600/VT600
B MM600

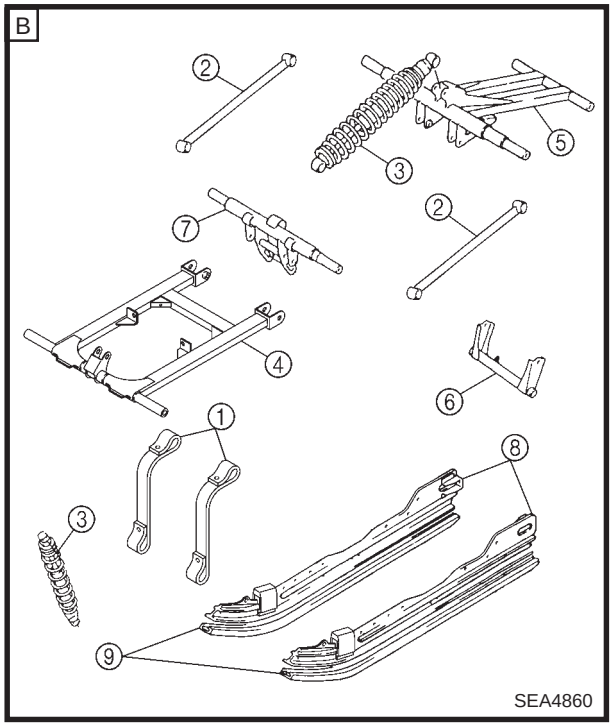

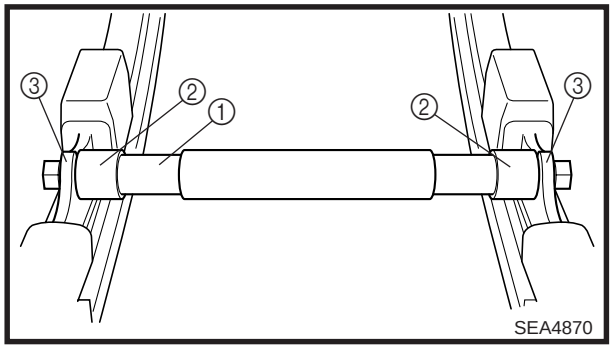

ASSEMBLY

1. Install:
   - Shaft ① (MM600)

NOTE:

Ensure the rubber collars ② are not pinched between the shaft and sliding frames ③.

Bolt (shaft):
72 Nm (7.2 m · kg, 52 ft · lb)
LOCTITE®

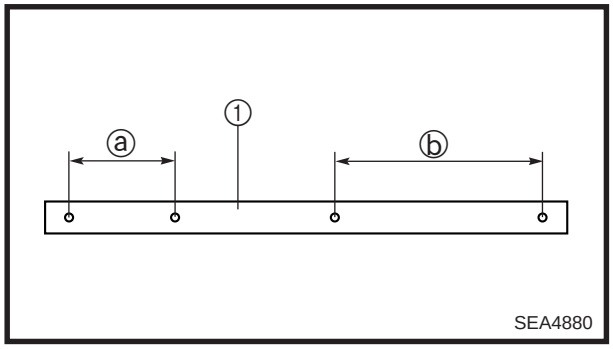

2. Install:
   - Stopper band ①

NOTE:

- For VX600ER/SX600/VT600:
  Install the stopper band with ⓐ toward the hook and ⓑ toward the front suspension bracket.
- For MM600:
  Install the stopper band with ⓐ toward the hook and ⓑ toward the shaft.

Nut (stopper band):
4 Nm (0.4 m · kg, 2.9 ft · lb)

INSTALLATION

1. Adjust:
   - Slide rail suspension position (MM600)
     Refer to "REAR SUSPENSION" in CHAPTER 2.

Control rod parts number

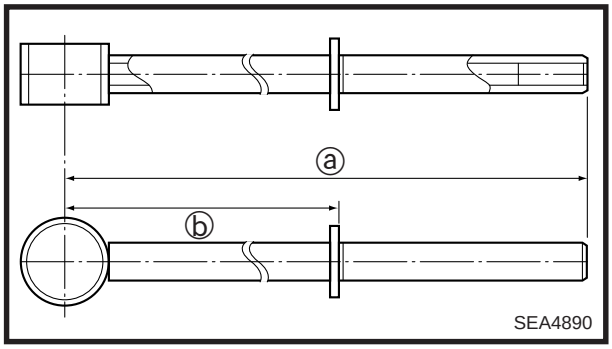

	B Parts number	C Length ⓐ	D Length ⓑ
A Control rod 1	8CR-4745A-01	310.5 mm (12.2244 in)	200.0 mm (7.8740 in)
A Control rod 1	8ED-4745A-00	262.5 mm (10.3346 in)	146.0 mm (5.7480 in)

	E Control rod 1 parts number	F Control rod 2 parts number	G Washer plate parts number H Washer plate thickness	
			I Upper	J Lower
VX600ER/ SX600	8CR-4745A-01	8CR-4745B-00	90202-16232 10.0 mm (0.3937 in)	90202-16232 10.0 mm (0.3937 in)
MM600	8ED-4745A-00		90202-16229 2.5 mm (0.0984 in)	90202-16231 7.5 mm (0.2953 in)
VT600	8CR-4745A-01		90202-16230 5.0 mm (0.1969 in)	90202-16229 2.5 mm (0.0984 in)

FRONT AXLE AND TRACK

A: 8.5 Nm (0.85 m · kg, 6.1 ft · lb)

B: 20 Nm (2.0 m · kg, 14 ft · lb)

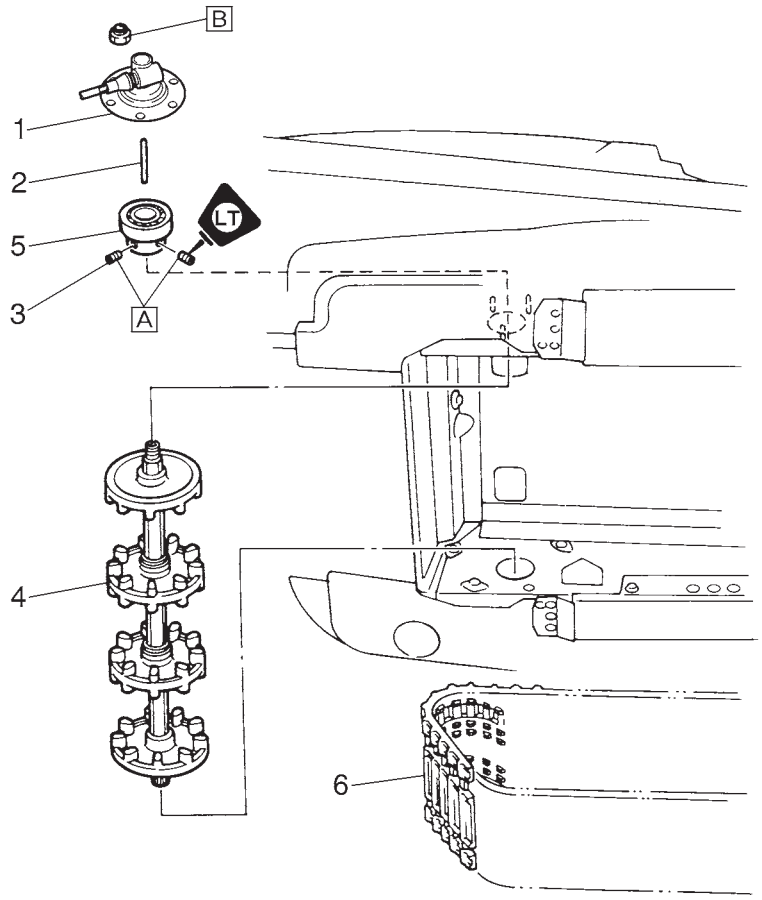

SEA4900

Order	Job name/Part name	Q'ty	Remarks
	Front axle and track removal		Remove the parts in the order listed below.
	Drive chain housing		Refer to "DRIVE CHAIN HOUSING".
	Slide rail suspension		Refer to "SLIDE RAIL SUSPENSION".
	Secondary sheave		Refer to "SECONDARY SHEAVE".
1	Speedometer gear assembly	1	
2	Cable joint	1	
3	Set screw	2	
4	Front axle assembly	1	
5	Bearing	1	
6	Track	1	
			For installation, reverse the removal procedure.

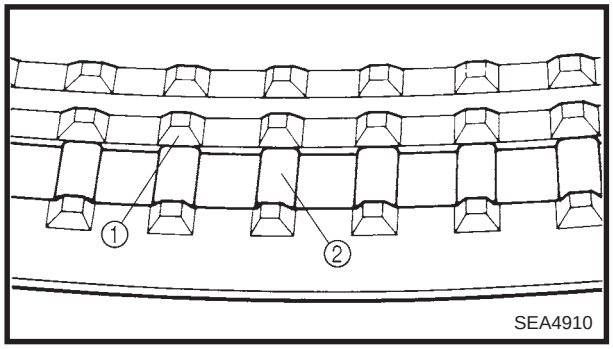

INSPECTION

1. Inspect:
   - Track ①
   - Slide metal ②
     Wear/cracks/damage → Replace.

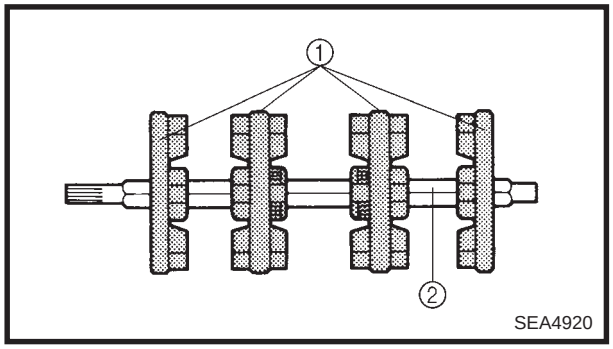

2. Inspect:
   - Sprocket wheel ①
     Wear/break/damage → Replace.
   - Front axle ②
     Bends/scratches (excessive)/damage → Replace.

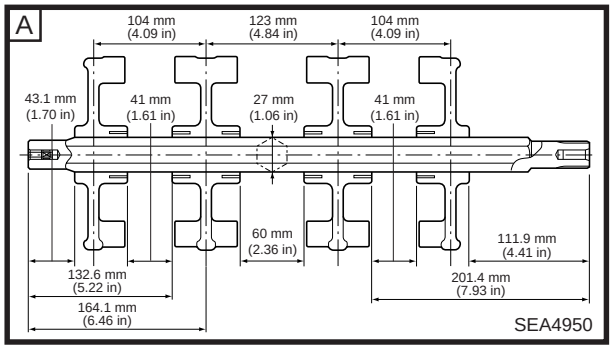

INSTALLATION

1. Install:
   - Sprocket wheels
   - Guide wheels

NOTE:

- When pressing the sprocket wheels onto the front axle, align the lugs on each sprocket wheel.
- Position each sprocket wheel on the axle as shown in the illustration.

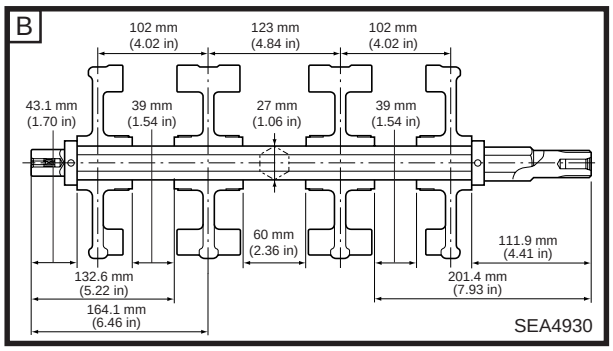

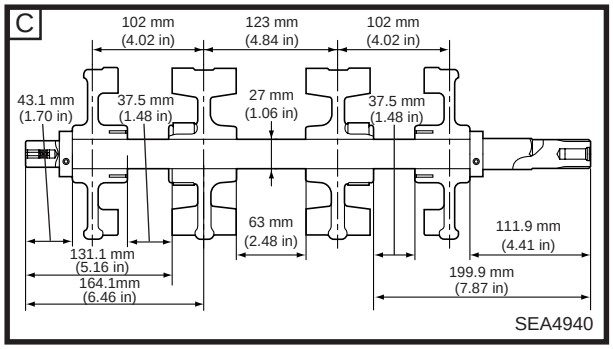

A VX600ER/VT600
B SX600
C MM600

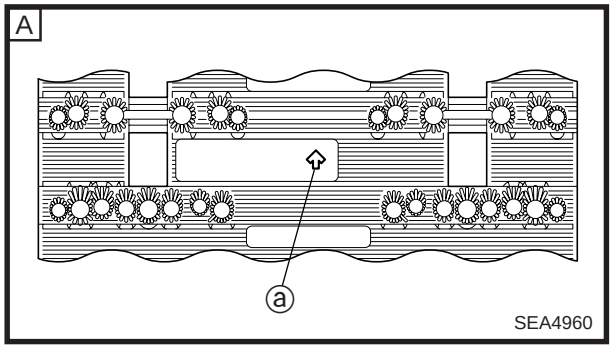

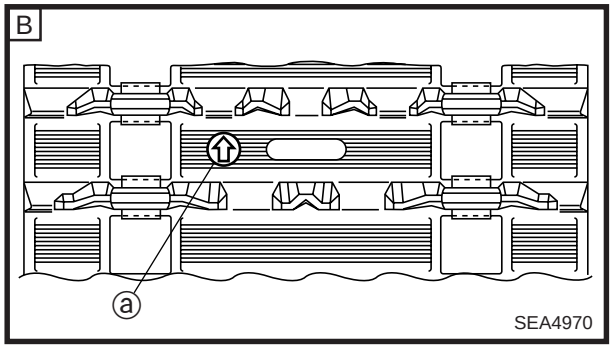

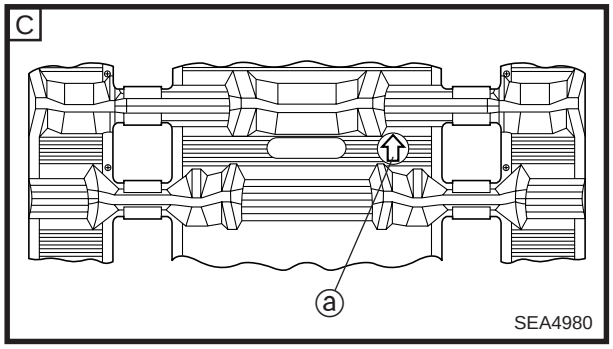

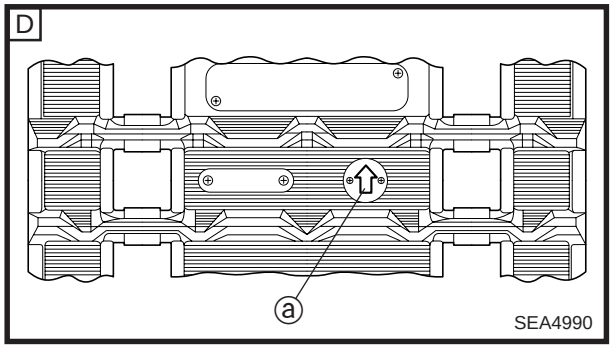

2. Place the track in the chassis.

NOTE:

- For track with a direction of rotation mark ⓐ: Install the track with the mark pointing in the direction of track rotation.

A VX600ER, VT600 for U.S.A/Canada
B SX600
C MM600
D VT600 for Europe

ENGINE

EXHAUST ASSEMBLY

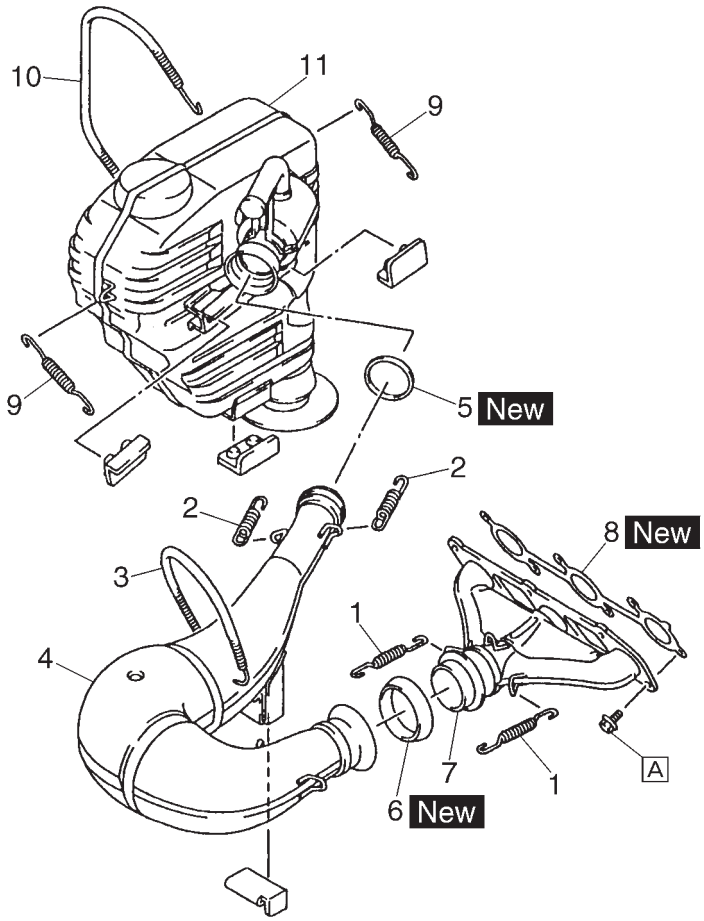

Order	Job name/Part name	Q'ty	Remarks
	Exhaust assembly removal		Remove the parts in the order listed below.
	Shroud		Open.
	Shroud's stopper wire		
1	Spring 1	2	
2	Spring 2	2	
3	Spring 3	1	
4	Exhaust pipe	1	
5	Gasket 1	1	
6	Gasket 2	1	
7	Exhaust joint	1	
8	Gasket 3	1	
9	Spring 4	2	
10	Spring 5	1	
11	Exhaust silencer	1	
			For installation, reverse the removal procedure.

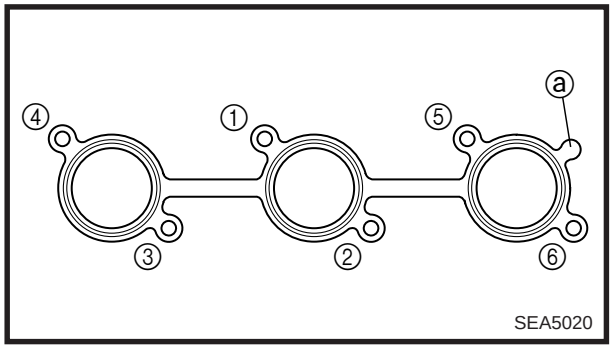

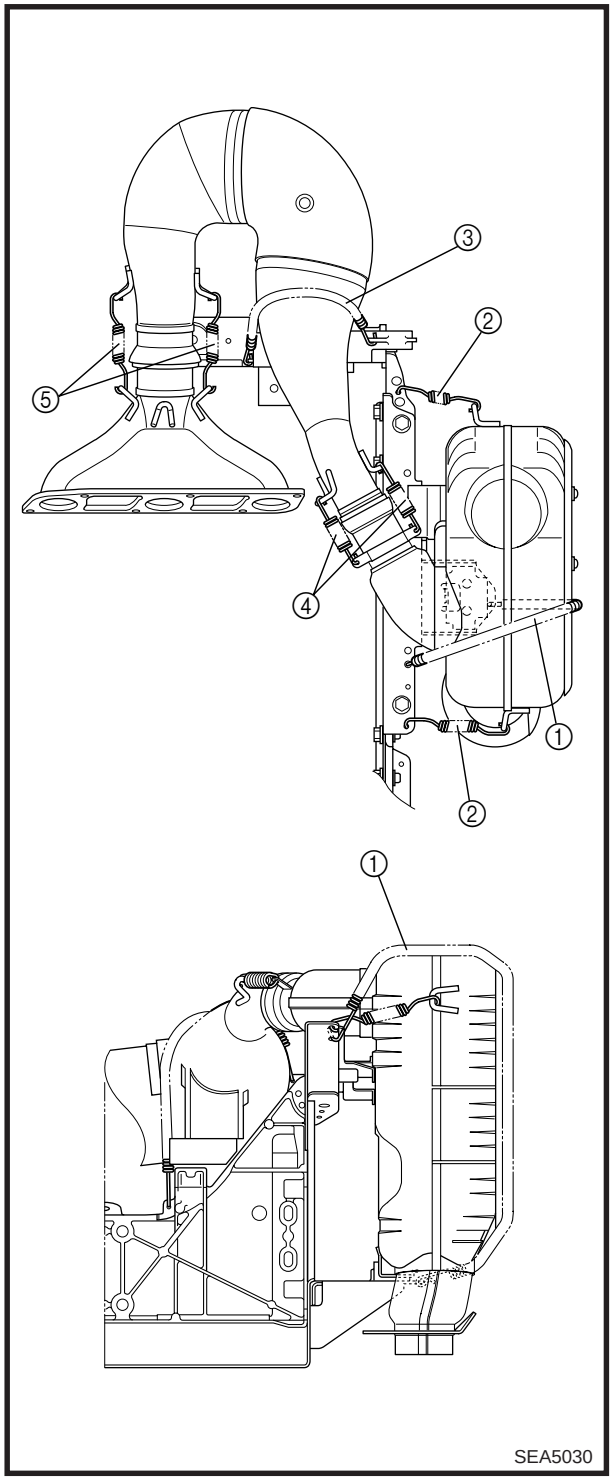

INSTALLATION

1. Install:
   - Gasket 3
   - Exhaust joint

NOTE:

- Install the gasket 3 with its projection ⓐ facing the primary sheave side.
- Tighten the bolts ① ~ ⑥ in a crisscross pattern.

Bolt (exhaust joint):
1st:
18 Nm (1.8 m · kg, 13 ft · lb)
2nd:
27 Nm (2.7 m · kg, 19 ft · lb)

2. Install:
   - Spring 5 ①
   - Springs 4 ②
   - Spring 3 ③
   - Springs 2 ④
   - Springs 1 ⑤

NOTE:

Install the springs as shown.

ENGINE ASSEMBLY

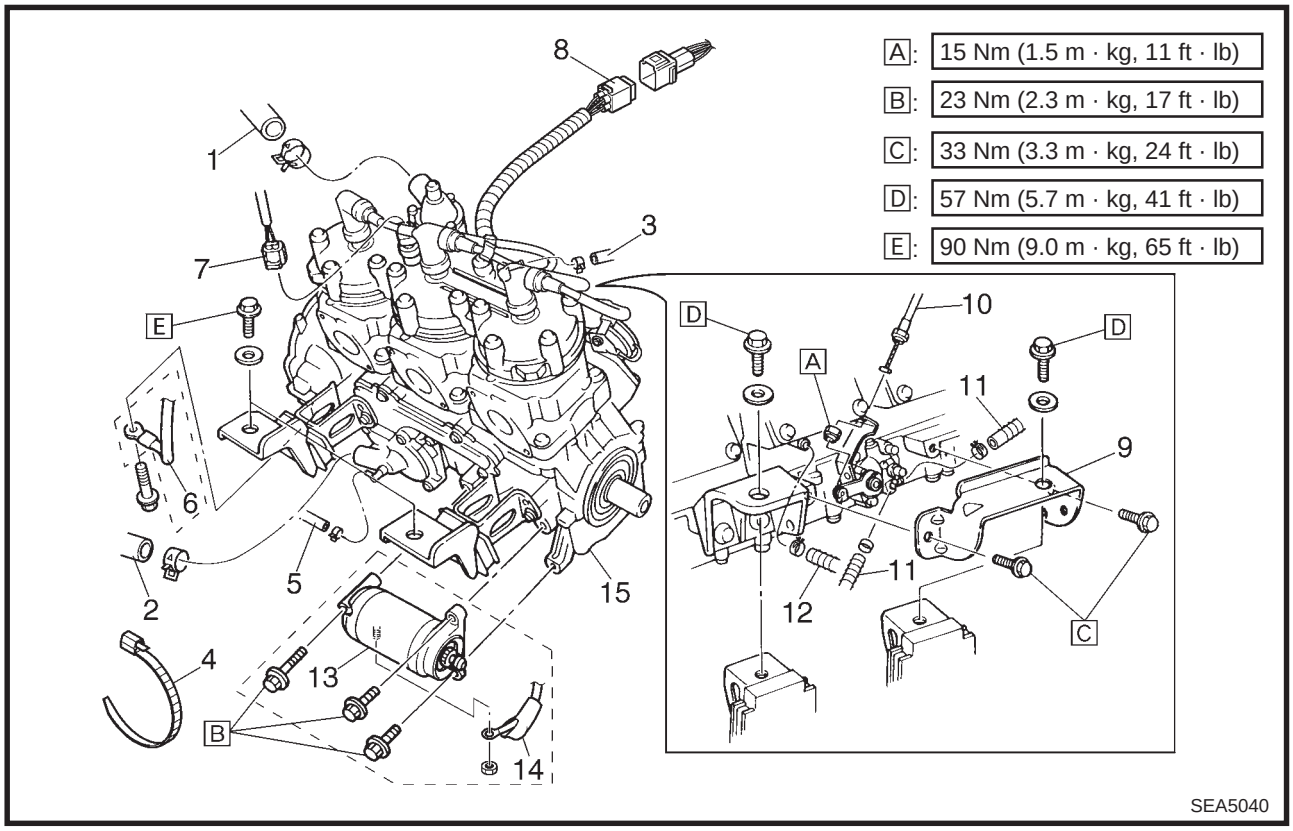

Order	Job name/Part name	Q'ty	Remarks
	Engine removal		Remove the parts in the order listed below.
	Exhaust assembly		Refer to "EXHAUST ASSEMBLY".
	Carburetors		Refer to "CARBURETORS" in CHAPTER 7.
	Recoil starter		Refer to "RECOIL STARTER".
	AC magneto rotor		Refer to "AC MAGNETO".
	Primary sheave		Refer to "PRIMARY SHEAVE AND DRIVE V-BELT" in CHAPTER 4.
	Coolant		Drain. Refer to "COOLING SYSTEM" in CHAPTER 2.
1	Coolant hose 1	1	Disconnect.
2	Coolant hose 6	1	Disconnect.
3	Carburetor heating hose 1	1	Disconnect.
4	Plastic band	1	
5	Carburetor heating hose 3	1	Disconnect.
6	Battery negative lead	1	(VX600ER/VT600)
7	Water temperature sensor coupler	1	Disconnect.
8	Ignition coil coupler	1	Disconnect.
9	Rear bracket (right)	1	
10	Oil pump cable	1	
11	Oil delivery hose	2	Disconnect.
12	Vacuum hose	1	Disconnect.
13	Starter motor	1	(VX600ER/VT600)
14	Starter motor lead	1	(VX600ER/VT600)
15	Engine assembly	1	
			For installation, reverse the removal procedure.

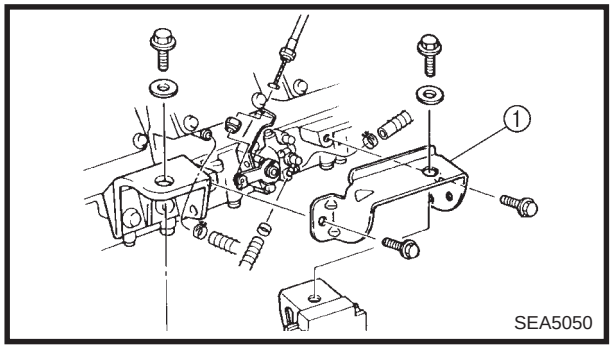

INSPECTION

1. Inspect:
   - Rear bracket (right) ①
     Cracks/damage → Replace.

INSTALLATION

NOTE:

After installing all parts, refer to “CABLE ROUTING” in CHAPTER 9, to check the cable, lead and hose routings.

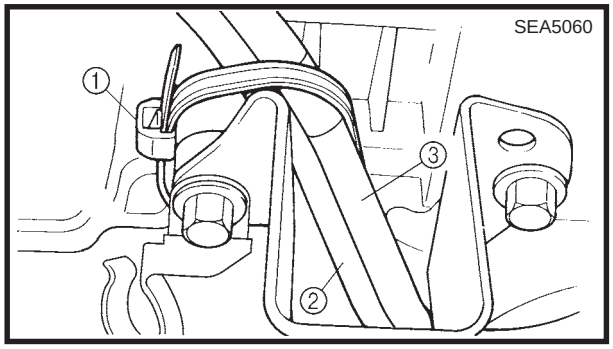

1. Fasten:
   - Plastic band ①

NOTE:

- Fasten the carburetor heating hose 3 ② without squashing it.
- For VX600ER/VT600:
  Clamp the starter motor lead ③ and carburetor heating hose 3 ② together so that the white tape on the starter motor lead ③ is positioned behind the front bracket.

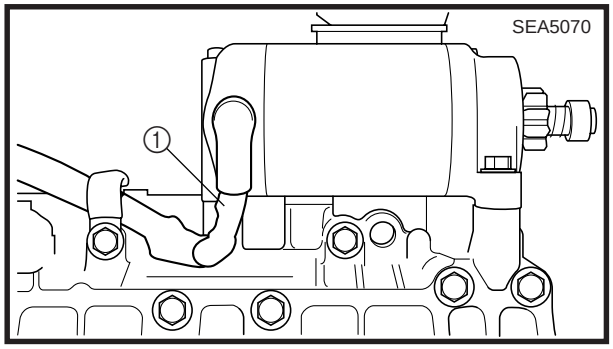

2 .Install:
   - Starter motor lead ① (VX600ER/VT600)

NOTE:

Route the starter motor lead as shown in the illustration.

3. Bleed:
   - Oil system
     Refer to “OIL PUMP” in CHAPTER 2.
   - Cooling system
     Refer to “COOLING SYSTEM” in CHAPTER 2.

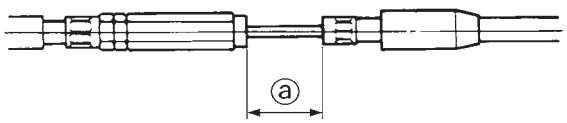

4. Adjust:
   - Oil pump cable distance ⓐ
     Refer to “OIL PUMP” in CHAPTER 2.

Distance:
23 ± 1 mm (0.906 ± 0.039 in)

CYLINDER HEAD AND CYLINDER

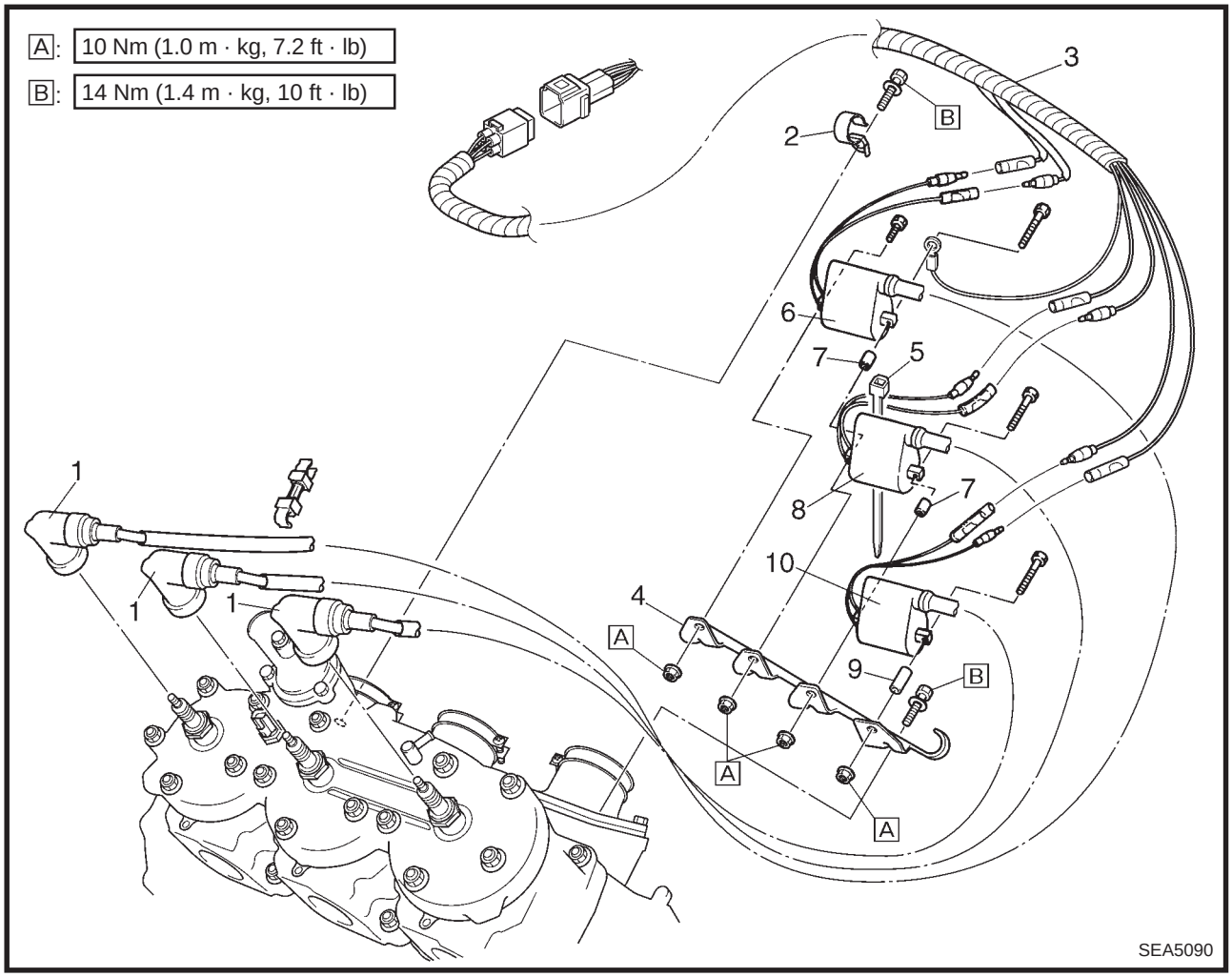

Order	Job name/Part name	Q'ty	Remarks
	Cylinder head and cylinder removal		Remove the parts in the order listed below.
1	Spark plug cap	3	
2	Clamp	1	
3	Sub-wire harness 2	1	
4	Bracket	1	
5	Plastic band	3	
6	Ignition coil #3	1	
7	Spacer 1	2	
8	Ignition coil #2	1	
9	Spacer 2	1	
10	Ignition coil #1	1	

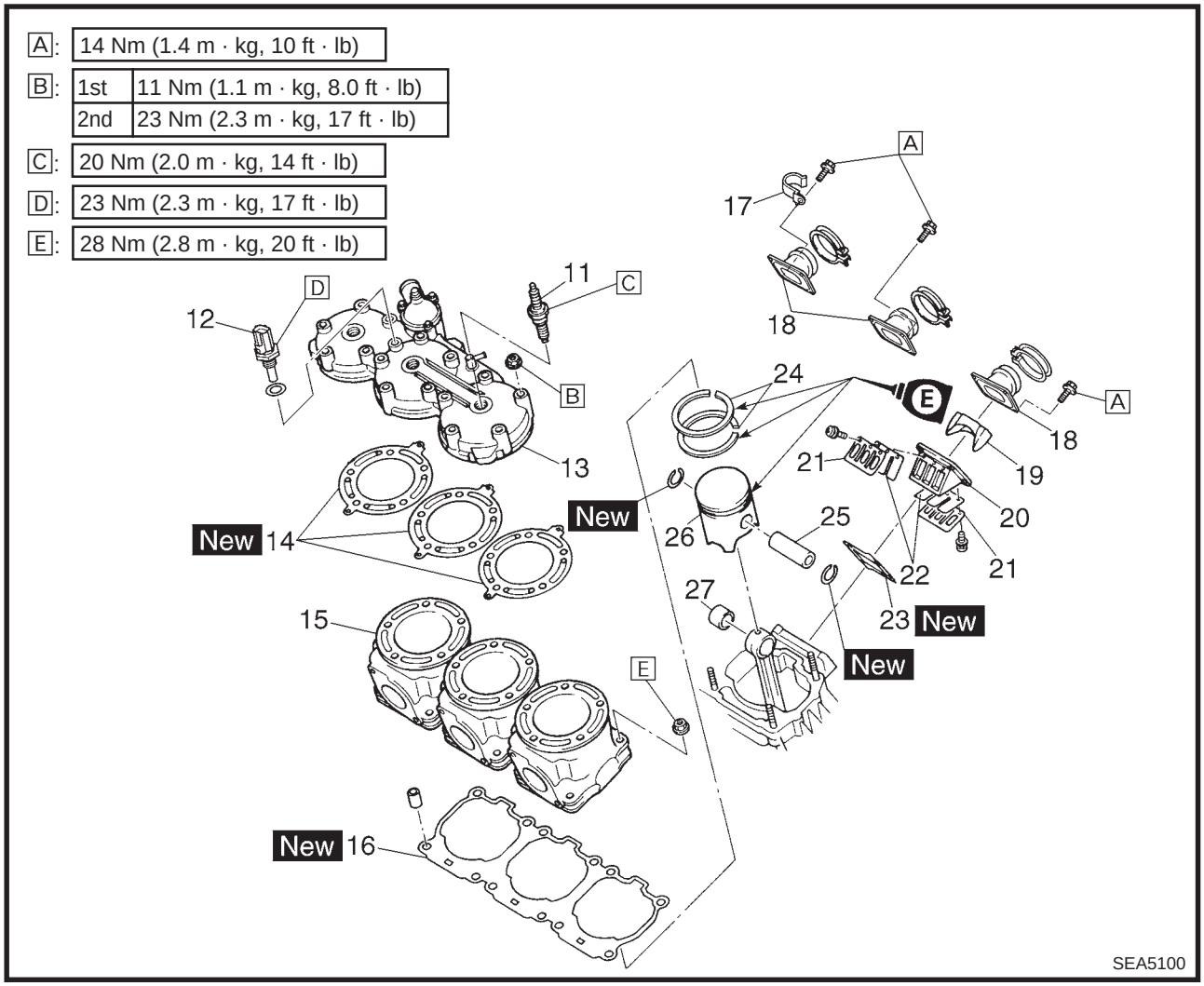

Order	Job name/Part name	Q'ty	Remarks
11	Spark plug	3	
12	Water temperature sensor	1	
13	Cylinder head	1	
14	Gasket	3	
15	Cylinder	3	
16	Gasket	1	
17	Clamp	1	
18	Intake manifold	3	
19	Spacer	3	
20	Reed valve seat	3	
21	Reed valve stopper	6	
22	Reed valve	6	
23	Gasket	3	
24	Piston ring	6	
25	Piston pin	3	
26	Piston	3	
27	Bearing	3	
			For installation, reverse the removal procedure.

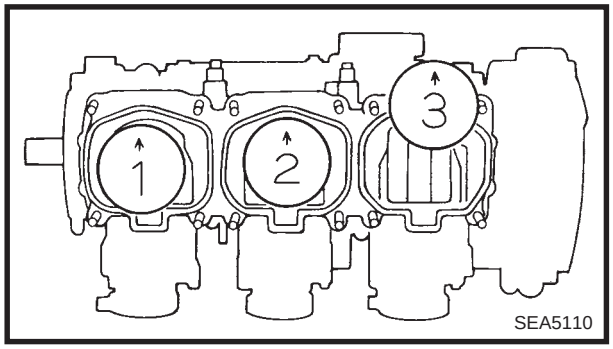

REMOVAL

1. Remove:
   - Piston pin clip
   - Piston pin
   - Piston
   - Small end bearing

NOTE:

- Before removing the piston pin clip, cover the crankcase with a clean rag so that you will not accidentally drop the clip into the crankcase.
- Before removing the piston pin, deburr the clip groove and pin hole area. If the piston pin groove is deburred and the piston pin is still difficult to remove, use the piston pin puller.
- Put identification marks on each piston head for reference during reinstallation.

	**Piston pin puller:** **90890-01304, YU-01304**

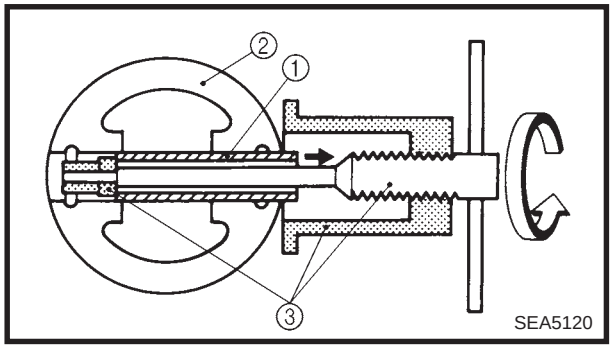

CAUTION:

Do not use a hammer to drive out the piston pin out.

① Piston pin
② Piston
③ Piston pin puller

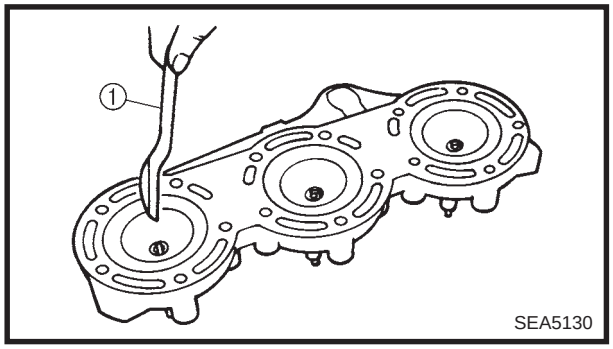

INSPECTION

1. Eliminate:
   - Carbon deposits
     (from the combustion chamber)
     Use the rounded scraper ①.

CAUTION:

Do not use a sharp instrument. Avoid damaging or scratching the surface.

2. Inspect:
   - Cylinder head water jacket
     Crust of minerals/rust → Clean.

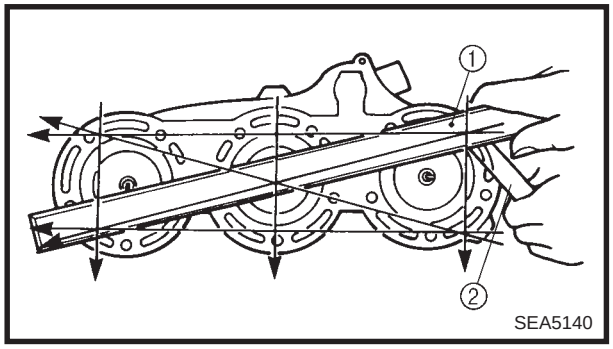

3. Measure:
   - Cylinder head warpage
     Out of specification → Resurface.

Warpage limit:
0.03 mm (0.0012 in)

- Straight edge ①
- Thickness gauge ②

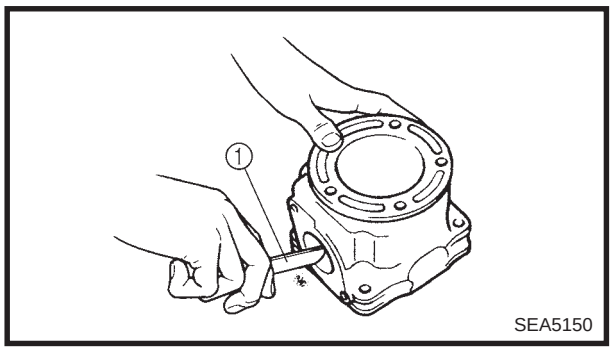

4. Eliminate:
   - Carbon deposits
     (from the cylinders)
     Use the rounded scraper ①.

CAUTION:

Do not use a sharp instrument. Avoid damaging or scratching the surface.

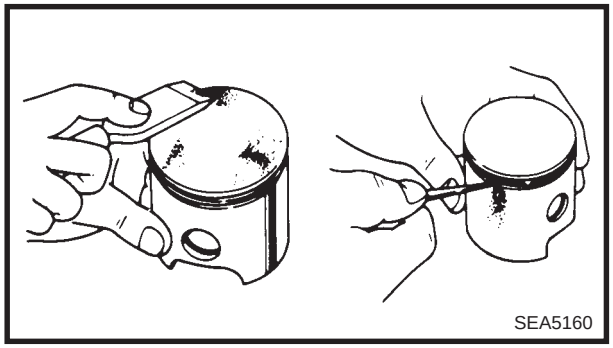

5. Eliminate:
   - Carbon deposits
     (from the piston crown and ring grooves)
6. Inspect:
   - Piston crown
     Burrs/nicks/damage → Replace.

7. Eliminate:
   - Score marks and lacquer deposits (from the piston wall)
     Use 600 ~ 800 grit wet sandpaper.

NOTE:

Sand in a crisscross pattern. Do not sand excessively.

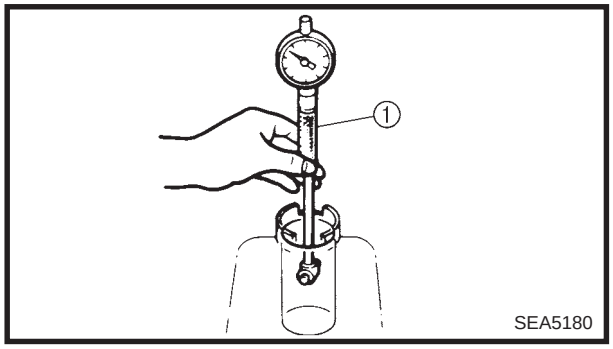

8. Measure:
   - Piston-to-cylinder clearance

Measurement steps:

1st step:

- Measure the cylinder bore (C) with a cylinder bore gauge ①.

NOTE:

Measure the cylinder bore (C) parallel to and at right angles to the crankshaft. Then find the average of the measurements.

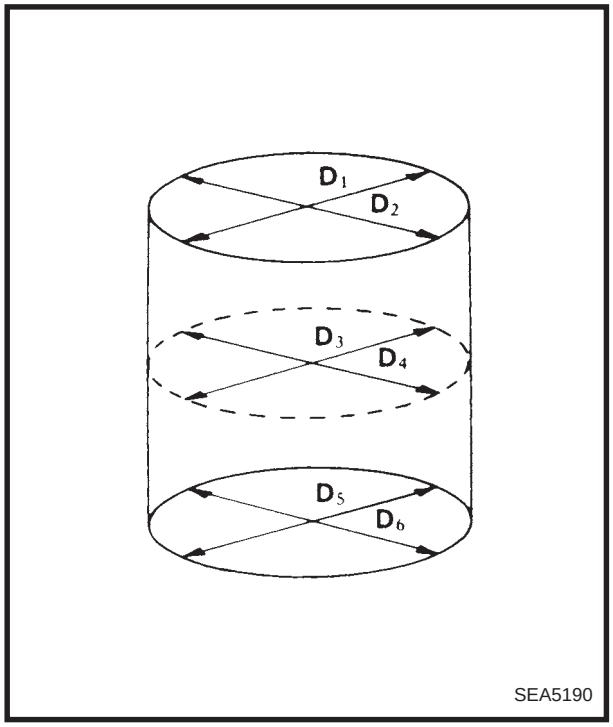

	Standard	Wear limit
Cylinder bore (C)	65.000 ~ 65.014 mm (2.5591 ~ 2.5596 in)	65.100 mm (2.5630 in)
Taper (T)	–	0.05 mm (0.002 in)
Out of round (R)	–	0.01 mm (0.0004 in)

C = Maximum D
T = (Maximum of D_1 or D_2) – (Maximum of D_5 or D_6)
R = (Maximum of D_1, D_3 or D_5) – (Minimum of D_2, D_4 or D_6)

- If out of specification, replace cylinder, and replace piston and piston rings as a set.

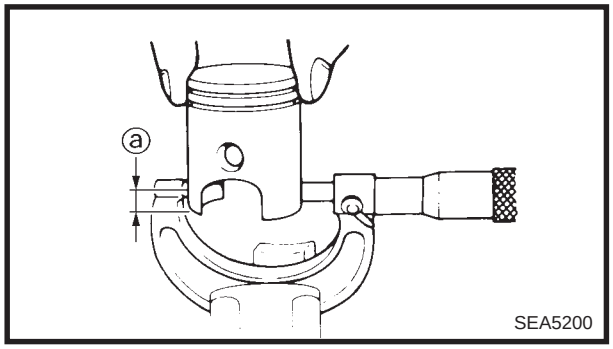

2nd step:

- Measure the piston skirt diameter (P) with a micrometer.

ⓐ 10 mm (0.39 in) from the bottom edge of the piston

Piston size (standard) (P):
64.932 ~ 64.935 mm
(2.5564 ~ 2.5565 in)

- If out of specification, replace the piston and piston rings as a set.

3rd step:

- Calculate the piston-to-cylinder clearance with the following formula:

Piston-to-cylinder clearance =
Cylinder bore (C) – Piston skirt diameter (P)

- If out of specification, rebore or replace cylinder, and replace piston and piston rings as a set.

Piston-to-cylinder clearance:
0.065 ~ 0.070 mm
(0.0026 ~ 0.0028 in)
Limit 0.15 mm (0.006 in)

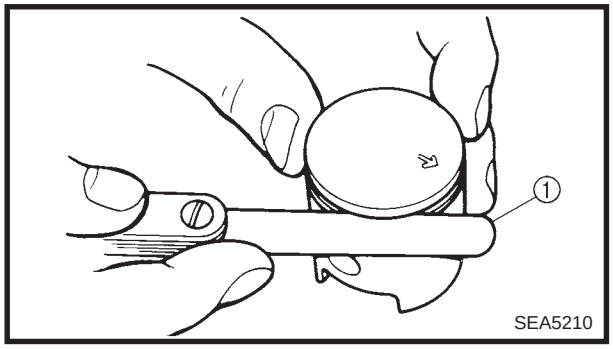

9. Measure:
   - Side clearance (piston rings)
     Use the thickness gauge ①.
     Out of specification → Replace the piston and/or rings.

NOTE:

Eliminate the carbon deposits from the piston ring grooves and rings before measuring the side clearance.

Side clearance (top):
0.02 ~ 0.06 mm
(0.0008 ~ 0.0024 in)
Side clearance (2nd):
0.02 ~ 0.06 mm
(0.0008 ~ 0.0024 in)

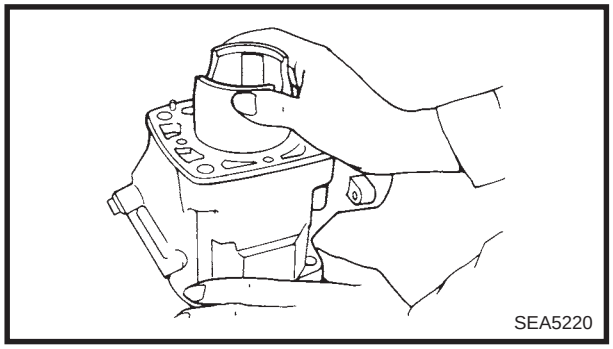

10. Install:
- Piston ring
  (into the cylinder)
  Push in the ring with the piston crown.

NOTE:

Insert the ring into the cylinder, and push it approximately 20 mm (0.8 in) into the cylinder. Push in the ring with the piston crown so that the ring is at right angles to the cylinder bore.

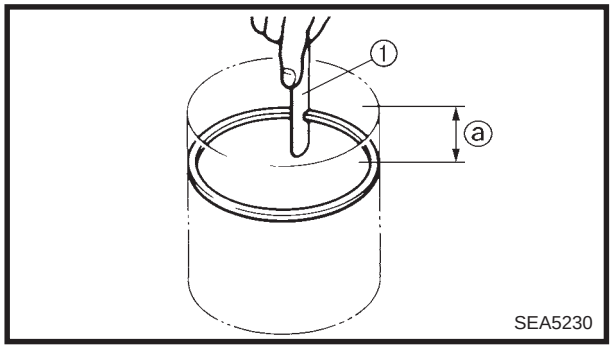

11. Measure:
- End gap (piston rings)
  Use the thickness gauge ①.
  Out of specification → Replace the rings as a set.

End gap (top):
0.35 ~ 0.55 mm
(0.014 ~ 0.022 in)
End gap (2nd):
0.35 ~ 0.55 mm
(0.014 ~ 0.022 in)

ⓐ 20 mm (0.8 in)

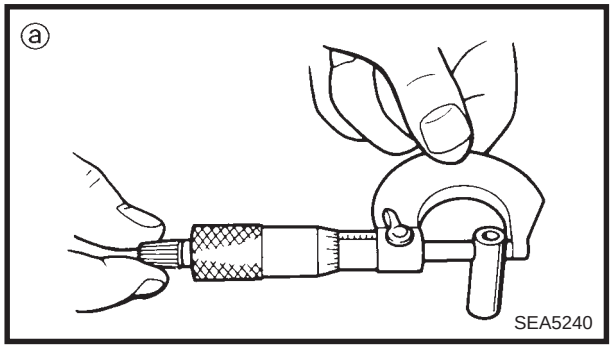

12. Measure:
- Outside diameter (piston pin) ⓐ
  Out of specification → Replace the piston pin.

Outside diameter (piston pin):
19.995 ~ 20.000 mm
(0.7872 ~ 0.7874 in)

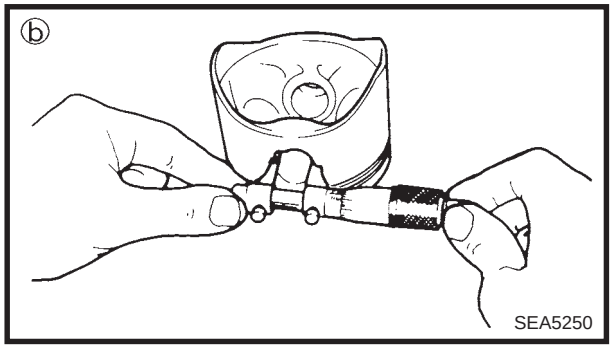

13. Measure:
- Piston pin-to-piston clearance
  Out of specification → Replace the piston.

Piston pin-to-piston clearance =
Bore size (piston pin) ⓑ –
Outside diameter (piston pin) ⓐ

Piston pin-to-piston clearance =
0.009 ~ 0.015 mm
(0.000354 ~ 0.000591 in)

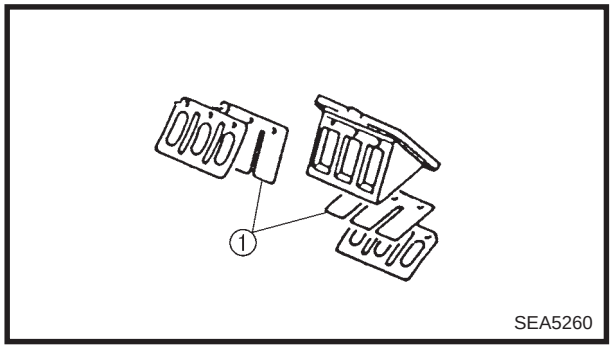

14. Inspect:
- Reed valves ①
  Bends/cracks/damage → Replace.

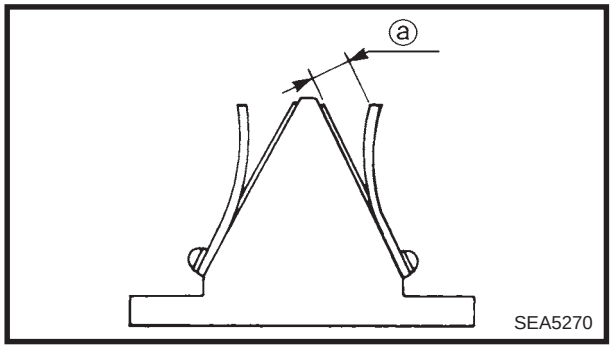

15. Measure:
- Valve stopper height ⓐ
  Out of specification → Replace the valve stopper.

Valve stopper height:
10.3 ~ 10.7 mm (0.41 ~ 0.42 in)

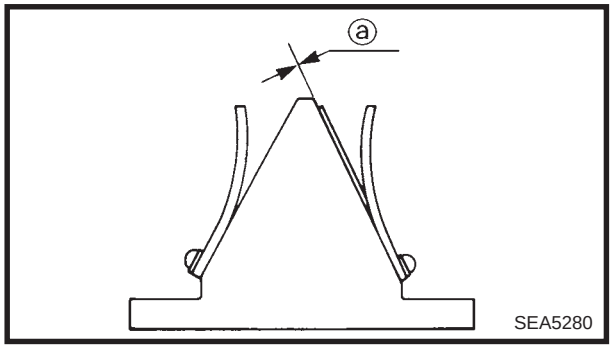

16. Measure:
- Reed valve bending limit ⓐ
  Out of specification → Replace the reed valve.

Reed valve bending limit:
less than 1.5 mm (0.059 in)

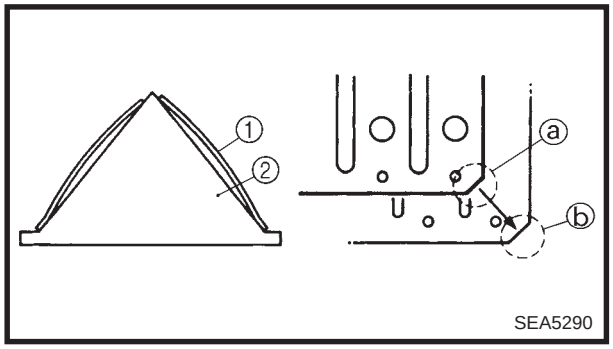

INSTALLATION

1. Install:
   - Reed valves
   - Reed valve stoppers

NOTE:

- Place the reed valve ① with its concave surface facing toward the reed valve seat ②.
- Fit the reed valve stopper cut ⓐ into the corresponding cut ⓑ on the reed valve.

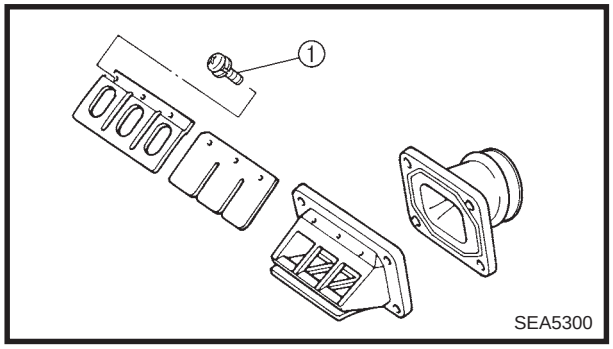

2. Tighten:
   - Screws ①

Screw (reed valve):
1 Nm (0.1 m · kg, 0.7 ft · lb)
LOCTITE®

NOTE:

Tighten each screw gradually to avoid warping.

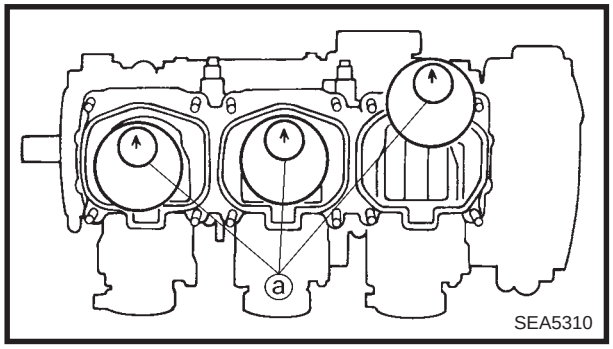

3. Install:
   - Small end bearing
   - Piston
   - Piston pin
   - Piston pin clip
   - Piston rings

NOTE:

- The arrow ⓐ on the piston must point toward to the front of the engine.
- Before installing the piston pin clip, cover the crankcase with a clean rag so that you do not accidentally drop the pin clip and other material into the crankcase.
- Position each piston very carefully in its original place.

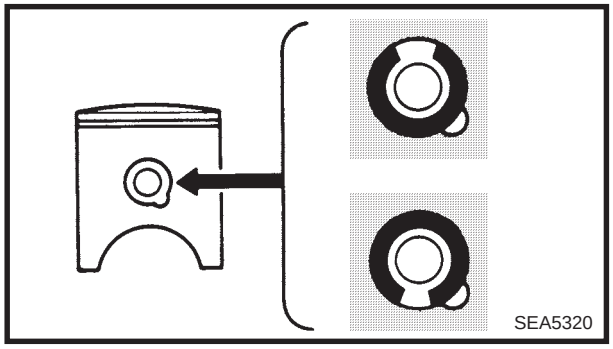

CAUTION:

- **Always use new piston pin clips.**
- **Do not allow the clip gap to align with the piston pin slot.**

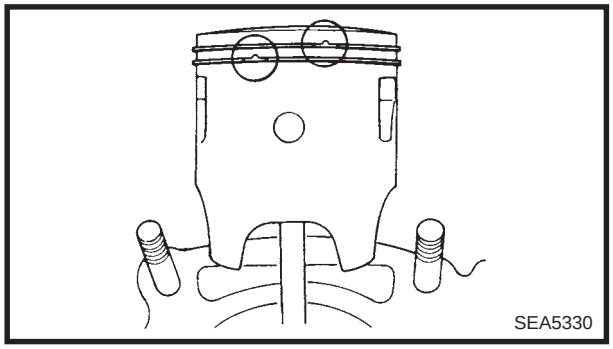

4. Check:
   - Piston ring position

CAUTION:

- **Make sure that the ring ends are properly fitted around the ring locating pins in the piston grooves.**
- **Be sure to check that the manufacturer's marks or numbers stamped on the rings face upward.**

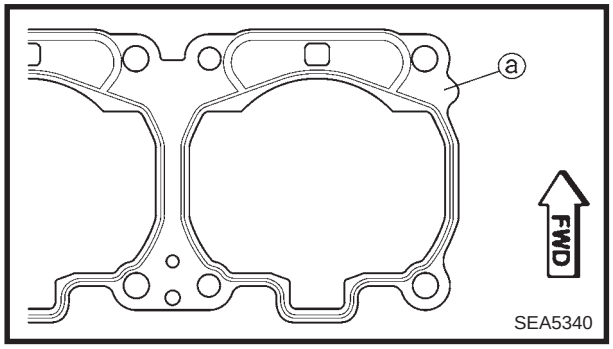

5. Install:
   - Gasket (cylinder)

NOTE:

Install the gasket (cylinder) with its projection ⓐ facing the AC magneto side.

CAUTION:

Always use new gasket.

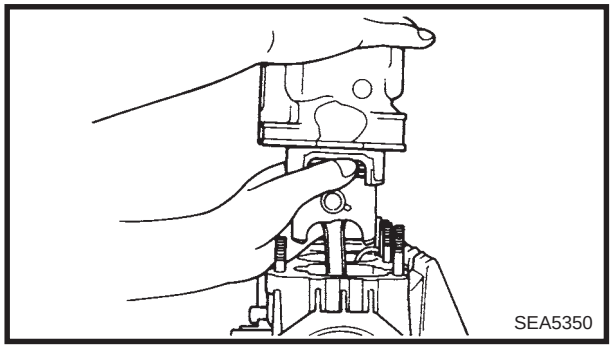

6. Install:
   - Cylinder

NOTE:

Install the cylinder with one hand while compressing the piston rings with the other hand.

7. Tighten:
   - Nuts (cylinder)

	**Nut (cylinder) :** **28 Nm (2.8 m · kg, 20 ft · lb)**

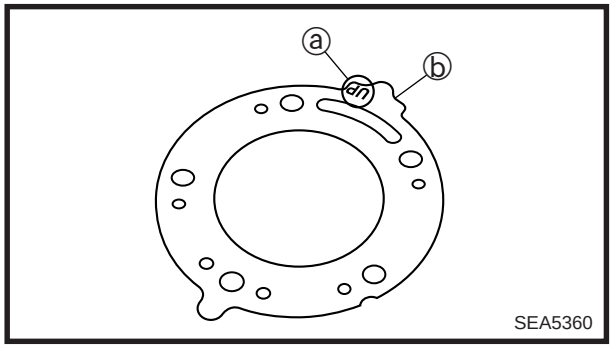

8. Install:
   - Gaskets (cylinder head)

NOTE:

Install with the mark ⓐ facing upwards and the projection ⓑ on the intake side.

9. Tighten:
   - Nuts (cylinder head)

Tightening steps:
- Temporarily tighten the cylinder head nuts ① ~ ⑮ as follows.

1st step:
- Tighten the nuts ① ~ ⑮.

	**Nut (cylinder head):** **11 Nm (1.1 m · kg, 8.0 ft · lb)**

2nd step:
- Retighten the nuts ① ~ ⑮.

	**Nut (cylinder head):** **23 Nm (2.3 m · kg, 17 ft · lb)**

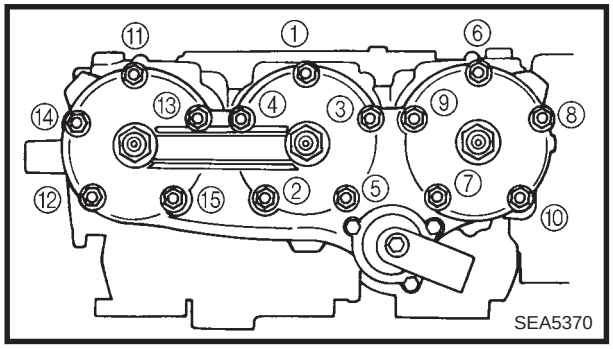

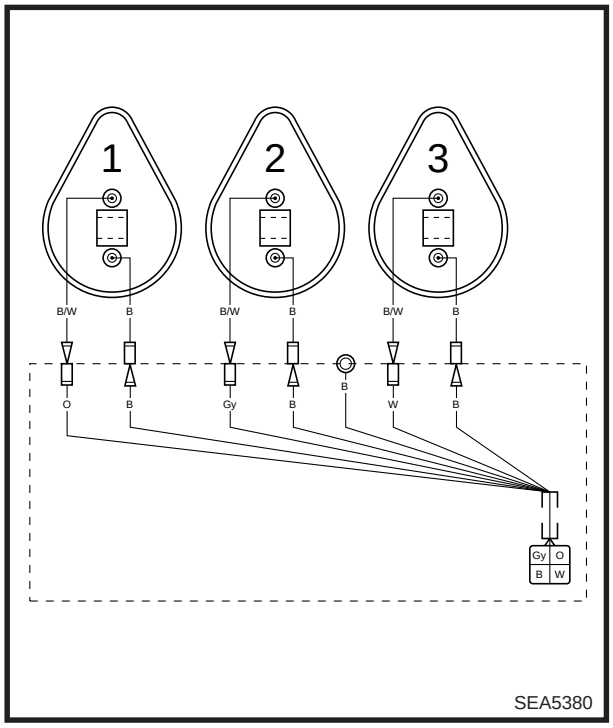

10. Connect:
    - Ignition coil leads
      Ignition coil #1 Black/White lead →
        Sub-wire harness Orange lead
      Ignition coil #2 Black/White lead →
        Sub-wire harness Gray lead
      Ignition coil #3 Black/White lead →
        Sub-wire harness White lead
      Ignition coil #1, #2, #3 Black lead →
        Sub-wire harness Black lead

NOTE:

Connect the black leads of the sub-wire harness to the ignition coils as follows: the longest lead to ignition coil #1, the medium-size lead to ignition coil #2, and the shortest lead to ignition coil #3.

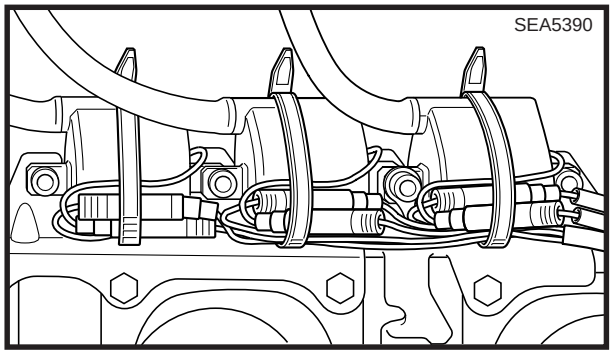

11. Install:
    - Plastic band

NOTE:

Pass the ignition coil leads as shown in the illustration.

OIL PUMP, CRANKCASE AND CRANKSHAFT

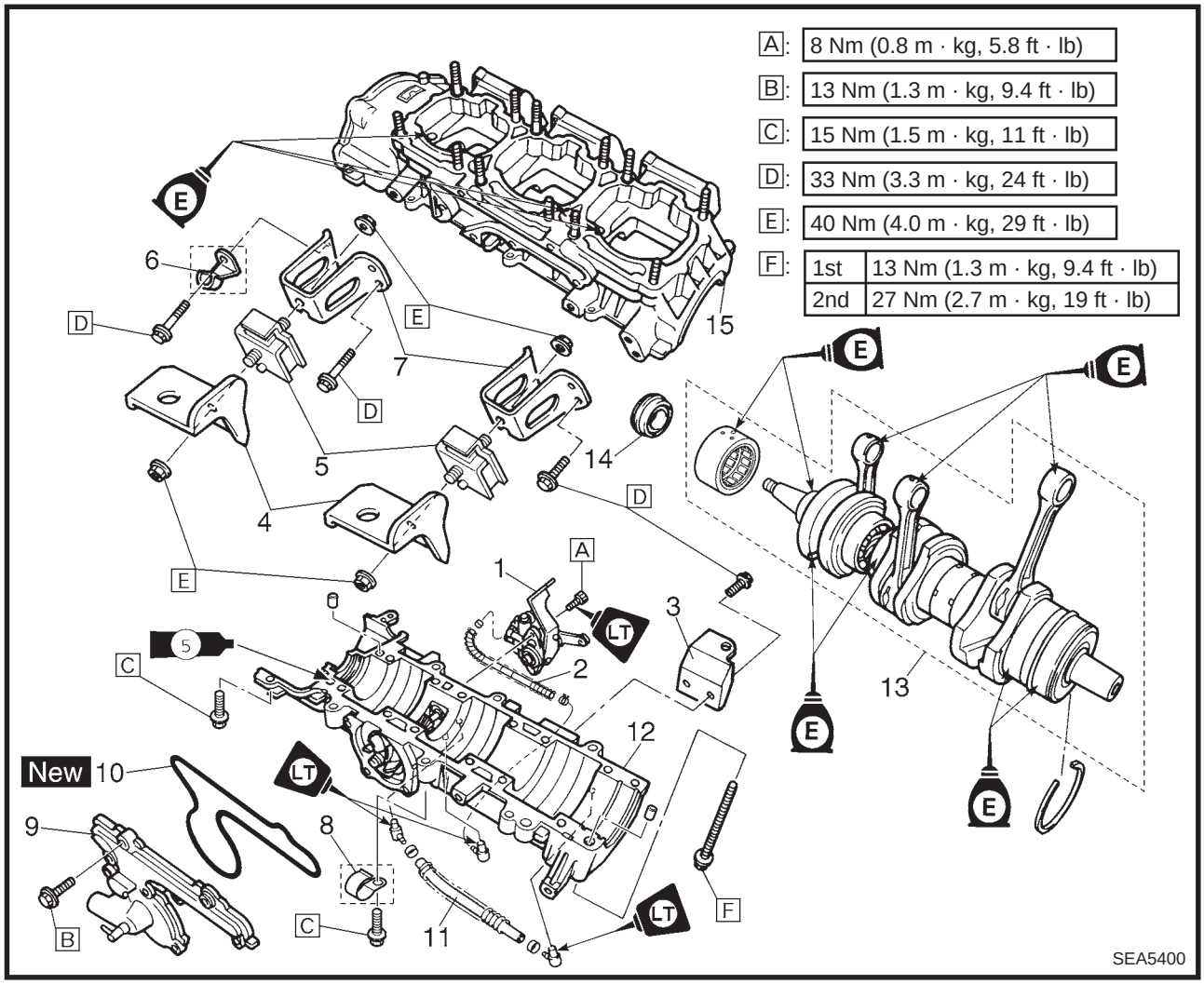

Order	Job name/Part name	Q'ty	Remarks
	Oil pump, crankcase and crankshaft removal		Remove the parts in the order listed below.
1	Oil pump	1	
2	Oil hose 1	1	
3	Rear bracket (left)	1	
4	Front lower bracket	2	
5	Damper	2	
6	Clamp	1	(VX600ER/VT600)
7	Front upper bracket	2	
8	Clamp	1	(VX600ER/VT600)
9	Water pump cover	1	
10	Gasket	1	
11	Oil hose 2	1	
12	Lower crankcase	1	
13	Crankshaft assembly	1	
14	Oil seal	1	
15	Upper crankcase	1	
			For installation, reverse the removal procedure.

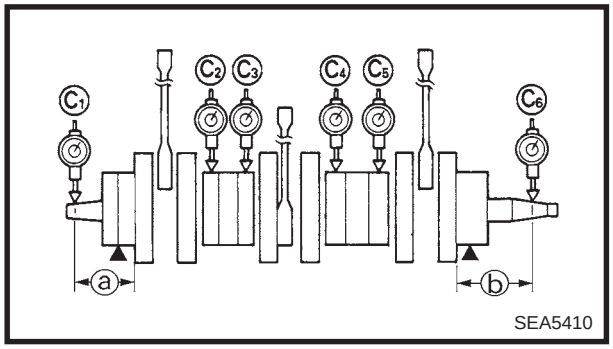

INSPECTION

1. Measure:
   - Runout
     Use the V-blocks and a dial gauge.
     Out of specification → Replace or repair the crankshaft.

Dial gauge:
90890-03097, YU-03097

Maximum runout:
C_1 : 0.03 mm (0.0012 in)
C_2 ~ C_5: 0.04 mm (0.0016 in)
C_6 : 0.03 mm (0.0012 in)

ⓐ 90 mm (3.54 in)
ⓑ 85 mm (3.35 in)

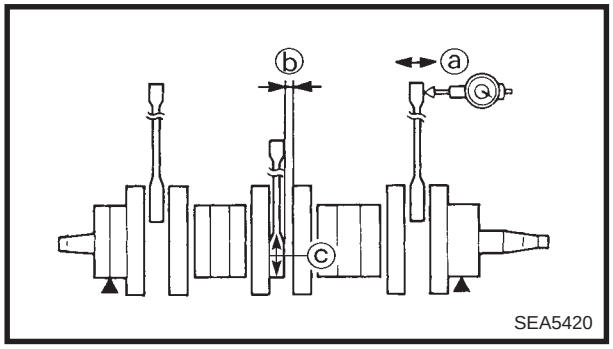

2. Measure:
   - Small end free play ⓐ
     Use the dial gauge.
     Out of specification → Replace the defective parts.

Small end free play:
0.8 ~ 1.0 mm (0.03 ~ 0.04 in)

   - Big end side clearance ⓑ
     Use the thickness gauge.
     Out of specification → Replace the defective parts.

Big end side clearance:
0.25 ~ 0.75 mm (0.01 ~ 0.03 in)

   - Big end radial clearance ⓒ
     Use the dial gauge.
     Out of specification → Replace the defective parts.

Big end radial clearance:
0.026 ~ 0.040 mm
(0.0010 ~ 0.0016 in)

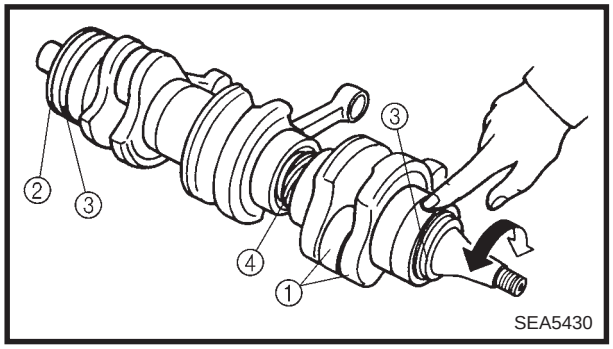

3. Inspect:
   - Crankshaft bearing ①
     Pitting/damage → Replace.
   - Stopper ring ②
     Bends/damage → Replace.
   - Crankshaft oil seals ③
   - Impeller drive gear teeth ④
     Wear/damage → Replace.

CAUTION:

Lubricate the bearings immediately after examining them in order to prevent rust.

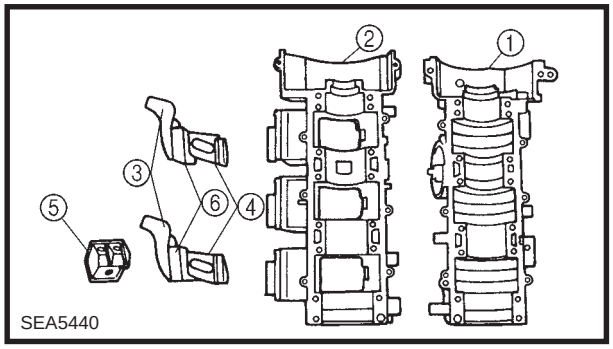

4 .Inspect:
   - Lower crankcase ①
   - Upper crankcase ②
   - Front lower brackets ③
   - Front upper brackets ④
   - Rear bracket (left) ⑤
   - Dampers ⑥
     Cracks/damage → Replace.

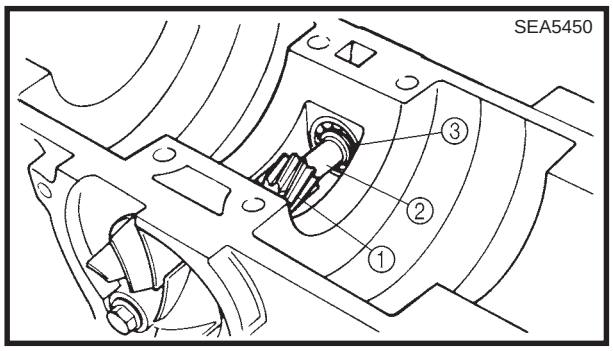

5. Inspect:
   - Impeller driven gear teeth ①
     Wear/damage → Replace the impeller shaft.
   - Impeller shaft ②
   - Bearing ③
     Pitting/damage → Replace.

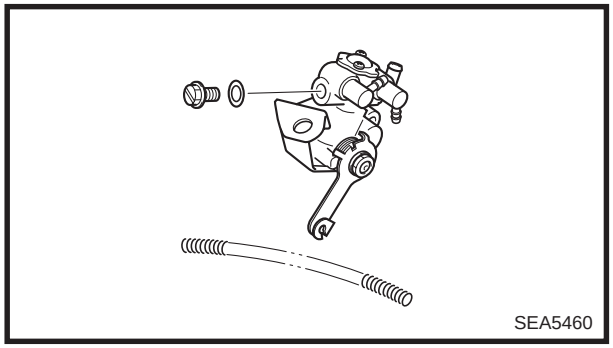

6. Inspect:
   - Oil pump
     Cracks/damage → Replace.
   - Oil hoses
     Clogs/damage → Replace.

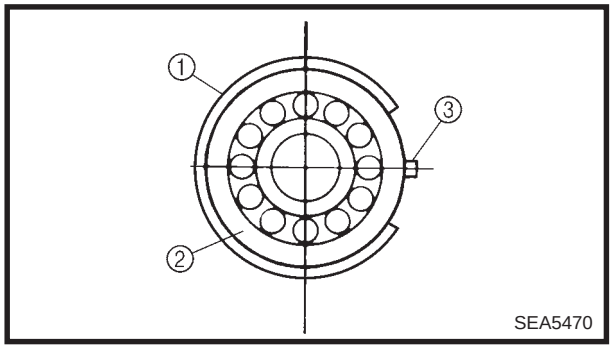

INSTALLATION

1. Install:
   - Stopper ring ①
     [onto the crankshaft bearing ② (primary sheave side) as shown]

③ Knock pin

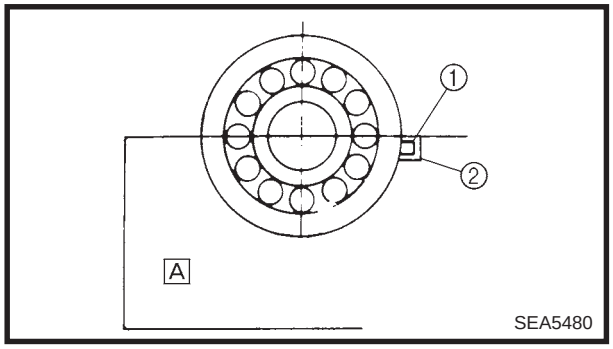

2. Install:
   - Crankshaft assembly
     (onto the upper crankcase A)

NOTE:

Turn the bearings and labyrinth seal to set the knock pins ① on the bearings and labyrinth seal into the pin holes ② in the upper crankcase A.

③ Bearing (AC magneto side)

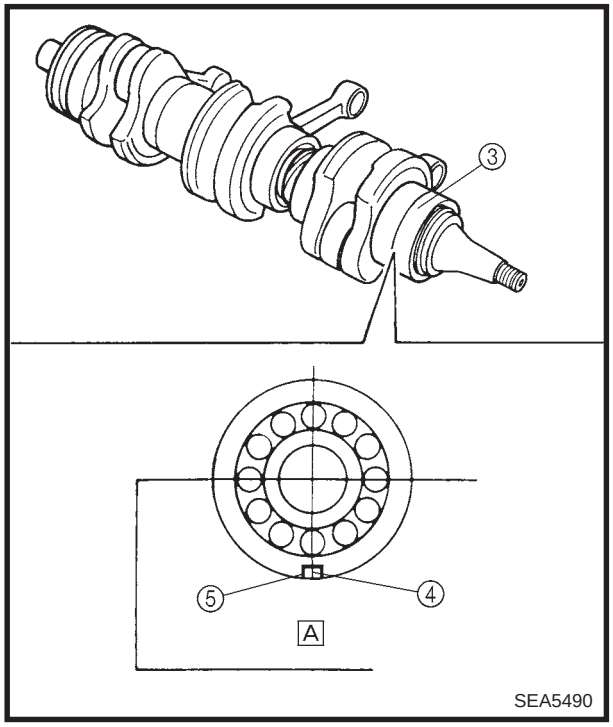

NOTE:

Turn bearing ③ to set the knock pin ④ on the upper crankcase A into the pin hole ⑤ in the bearing.

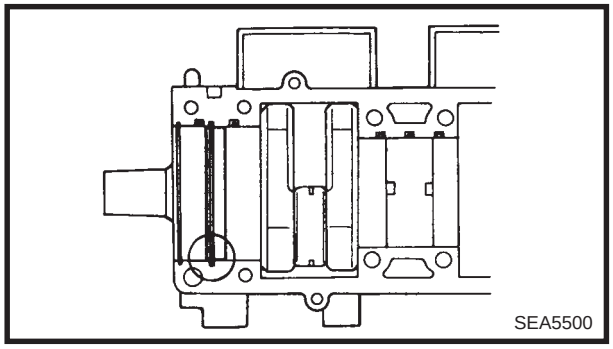

CAUTION:

The oil seal lip must fit into the crankcase groove.

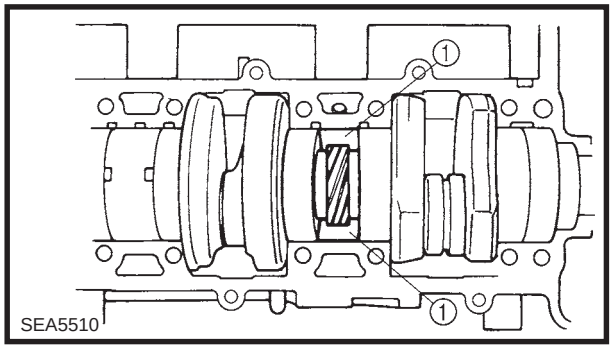

3. Fill:
- Gear room ①

Recommended oil:
YAMALUBE 2-cycle
Gear room capacity:
25 cm³ (0.81 Imp oz, 0.77 US oz)

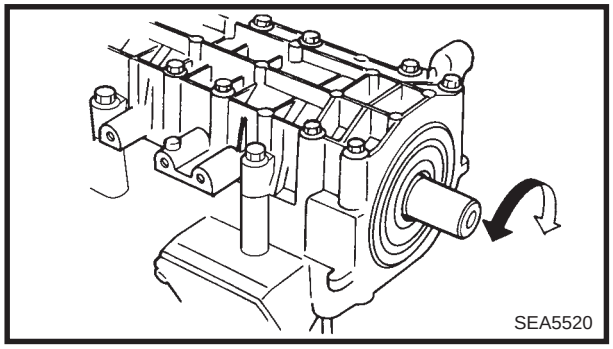

CAUTION:

Before installing and torquing the crankcase bolts, be sure to check that the crankshaft turns smoothly.

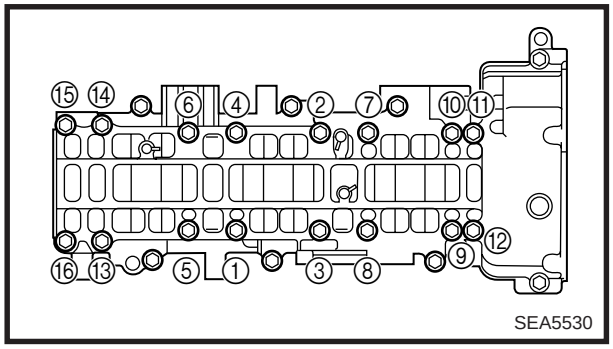

4. Tighten:
- Crankcase bolts ① ~ ⑯ (M8 × 80)

NOTE:

Tighten the bolts in order, starting with the lowest number, and torque the bolts in two stages.

Bolt (crankcase):
1st:
13 Nm (1.3 m · kg, 9.4 ft · lb)
2nd:
27 Nm (2.7 m · kg, 19 ft · lb)

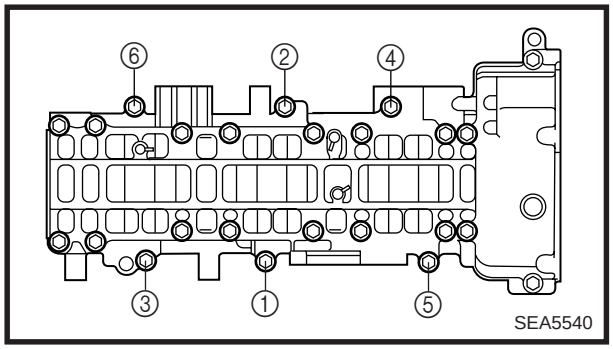

5. Tighten:
- Crankcase bolts ① ~ ⑥ (M8 × 35)

NOTE:

Tighten the bolts in order, starting with the lowest number.

Bolt (crankcase):
15 Nm (1.5 m · kg, 11 ft · lb)

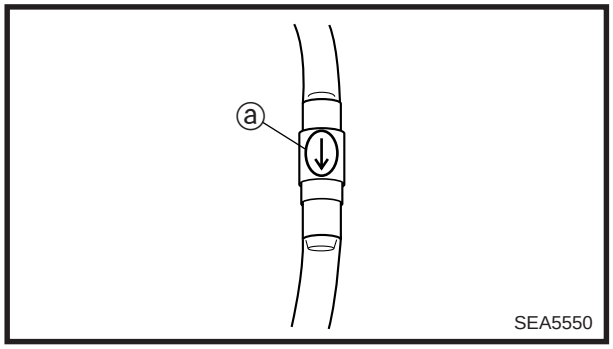

6. Install:
   - Oil hose 1

NOTE:

Install so that the mark ⓐ on the check valve faces the crankcase.

AC MAGNETO

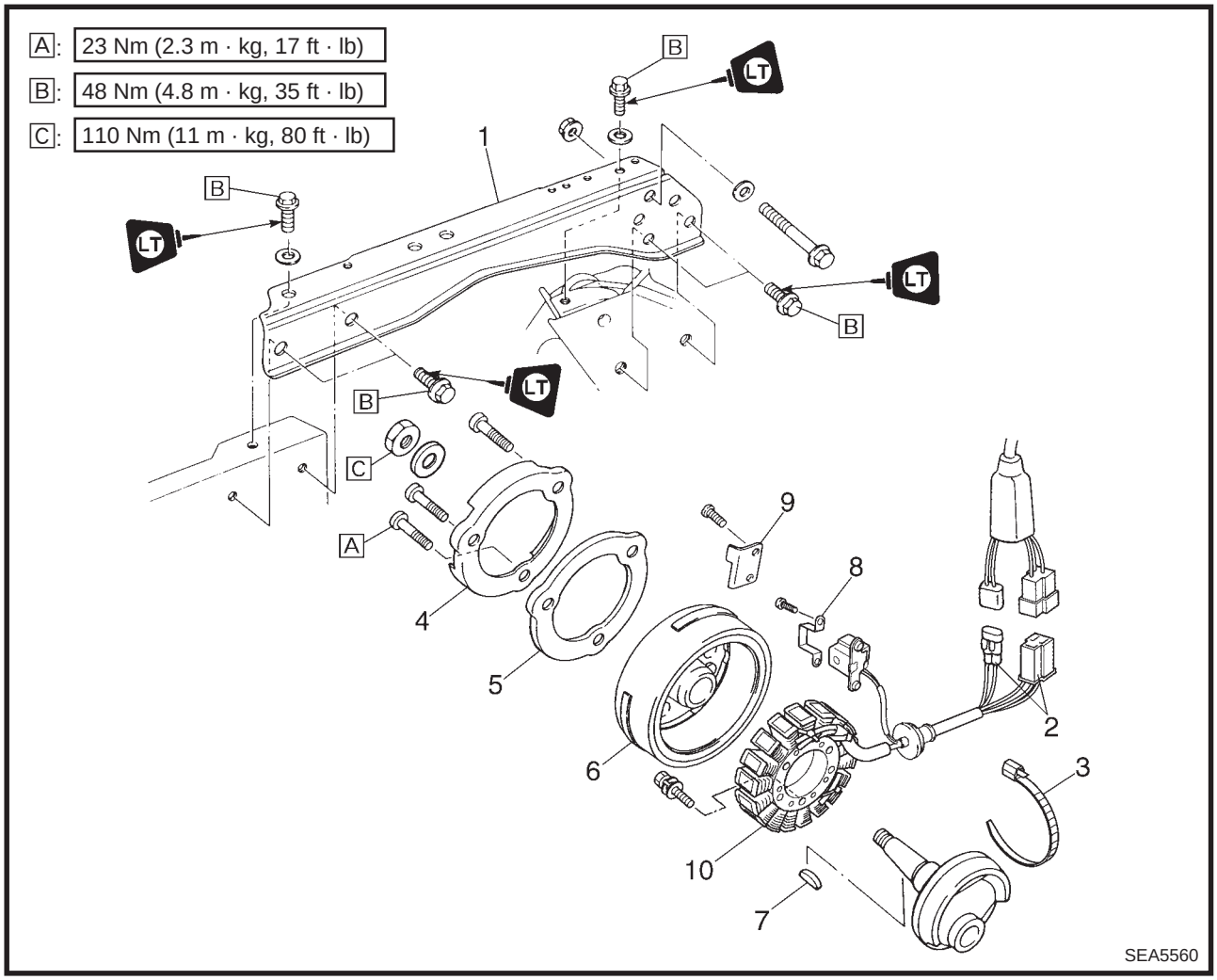

Order	Job name/Part name	Q'ty	Remarks
	AC magneto removal		Remove the parts in the order listed below.
	Recoil starter		Refer to "RECOIL STARTER".
1	Frame cross member	1	
2	AC magneto coupler	2	Disconnect.
3	Plastic band	1	
4	Starter pulley	1	
5	Spacer	1	
6	Magneto rotor	1	
7	Woodruff key	1	
8	Clamp	1	
9	Plate	1	
10	Stator coil assembly	1	
			For installation, reverse the removal procedure.

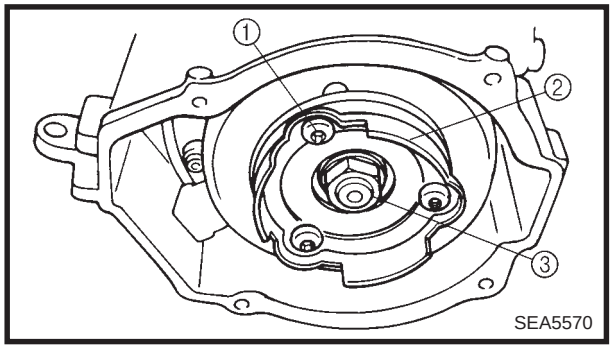

REMOVAL

1. Remove:
   - Bolts ①
   - Starter pulley ②
   - Nut ③

NOTE:

Attach the primary sheave holder to hold the primary sheave.

	**Primary sheave holder:** **90890-01701, YS-01880**

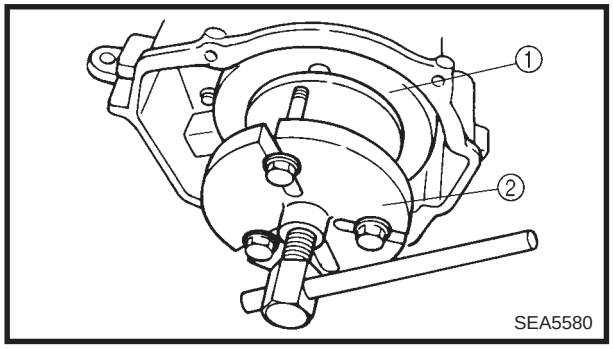

2. Remove:
   - Magneto rotor ①

NOTE:

- Remove the magneto rotor using the rotor puller ②.
- Fully tighten the tool holding bolts, making sure the tool body is parallel with the magneto rotor. If necessary, one screw may be backed out slightly to level the tool body.

	**Rotor holding puller:** **90890-01362, YU-33270**

INSTALLATION

NOTE:

After installing all parts, refer to “CABLE ROUTING” in CHAPTER 9, to check the cable, lead and hose routings.

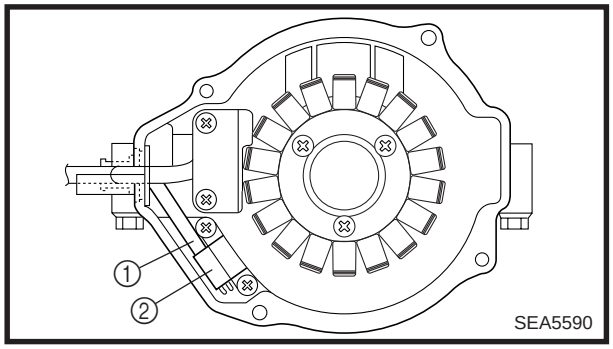

1. Install:
   - Stator coil

NOTE:

Route the pickup coil lead ① under and behind the pickup coil ② as shown.

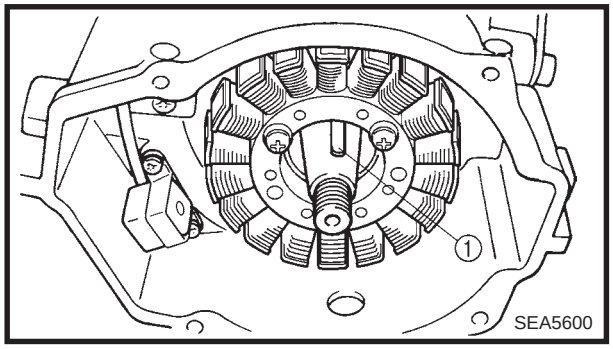

2. Install:
   - Woodruff key ①

CAUTION:

Be sure to remove any oil or grease from the tapered portion of the crankshaft using a cloth dampened with thinner.

NOTE:

Pass the magneto leads through the hole and install the grommet in the crankcase.

3. Install:
   - Magneto rotor
   - Washer
   - Nut

CAUTION:

Be sure to remove any oil or grease from the tapered portion of the magneto rotor using a cloth dampened with thinner.

NOTE:

When installing the magneto rotor, make sure the woodruff key is properly seated in the keyway of the crankshaft.

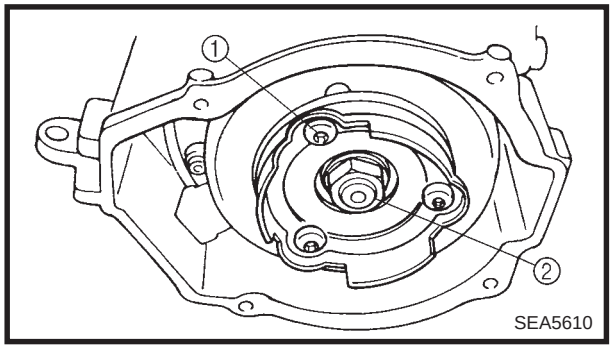

4. Tighten:
   - Bolts ①
   - Nut ②

Bolt (starter pulley):
23 Nm (2.3 m · kg, 17 ft · lb)
Nut (magneto rotor):
110 Nm (11 m · kg, 80 ft · lb)

NOTE:

Attach the primary sheave holder to hold the primary sheave.

Primary sheave holder:
90890-01701, YS-01880

RECOIL STARTER

A: 12 Nm (1.2 m · kg, 8.7 ft · lb)

B: 18 Nm (1.8 m · kg, 13 ft · lb)

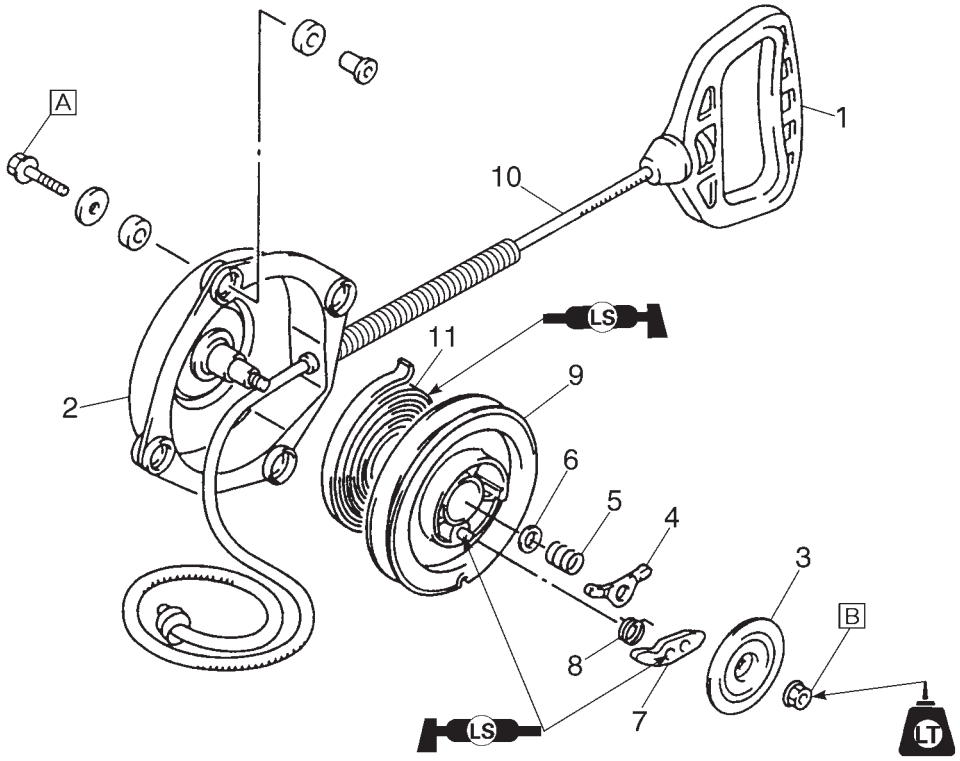

SEA5620

Order	Job name/Part name	Q'ty	Remarks
	Recoil starter removal		Remove the parts in the order listed below.
	Exhaust silencer		Refer to "EXHAUST ASSEMBLY".
1	Starter handle	1	
2	Recoil starter case	1	
3	Drive plate	1	
4	Cam guide	1	
5	Drive plate spring	1	
6	Washer	1	
7	Drive pawl	1	
8	Return spring	1	
9	Sheave drum	1	
10	Starter rope	1	
11	Starter spring	1	
			For installation, reverse the removal procedure.

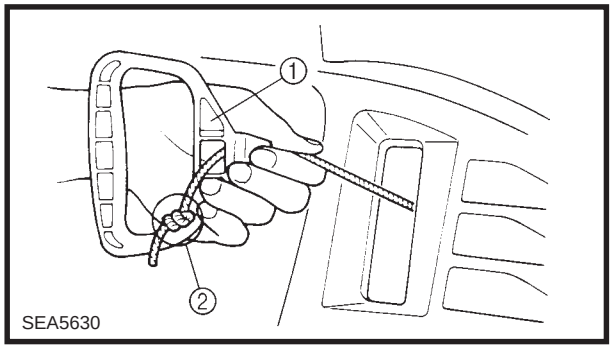

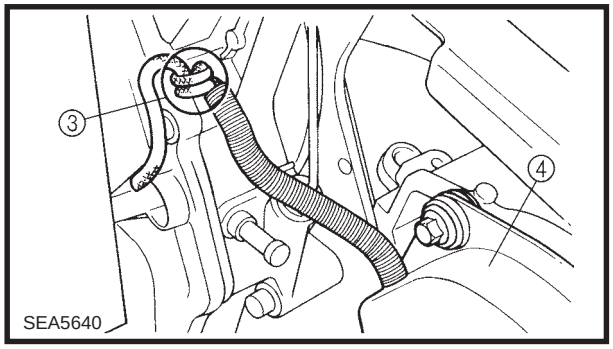

REMOVAL

1. Remove:
   - Starter handle ①

NOTE:

To remove the starter handle, untie the knot ② in the starter rope and then re-tie a knot ③ in the rope end so that it is not pulled into the recoil starter case ④.

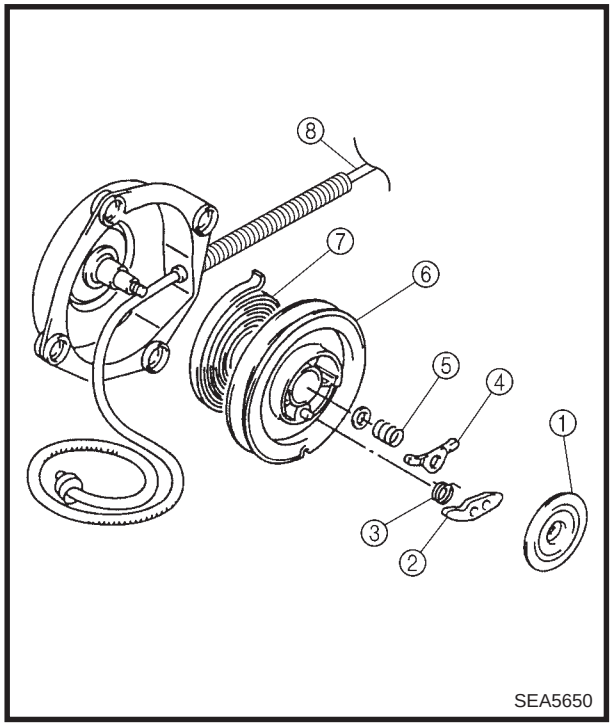

INSPECTION

1. Inspect:
   - Drive plate ①
     Cracks/bends/damage → Replace.
   - Drive pawl ②
   - Return spring ③
   - Cam guide ④
     Wear/cracks/damage → Replace.
   - Drive plate spring ⑤
     Wear/damage → Replace.
   - Sheave drum ⑥
     Cracks/damage → Replace.
   - Starter spring ⑦
     Cracks/bends/damage → Replace.
   - Starter rope ⑧
     Wear/breaks/damage → Replace.

INSTALLATION

1. Wind:
   - Starter rope (2-1/2 times counterclockwise) (in the sheave drum)

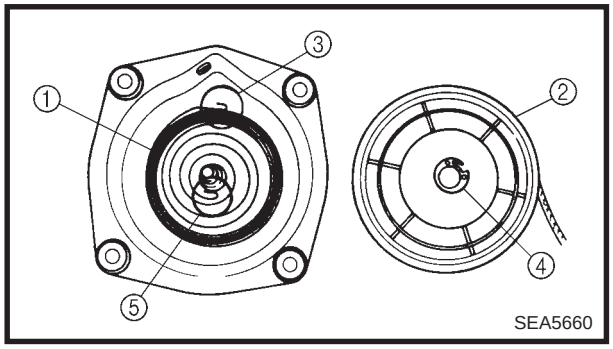

2. Install:
   - Starter spring ①
   - Sheave drum assembly ②

NOTE:

- Mesh the spring hook ③ with the case slit, then wind the spring counterclockwise into the case from a larger to a smaller diameter.
- Mesh the sheave drum hook ④ with the spring hook ⑤.

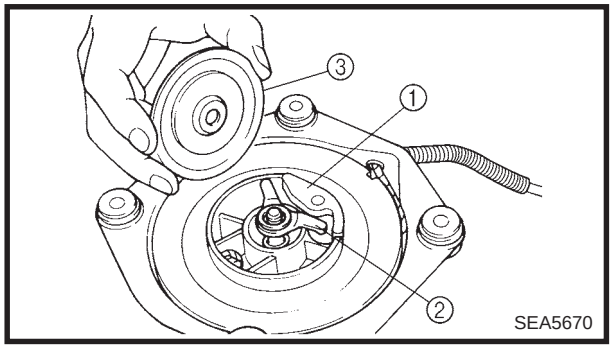

3. Install:
   - Drive pawl ①
   - Cam guide ②
   - Drive plate ③

NOTE:

The cam guide ② should not be on top of the drive pawl ①.

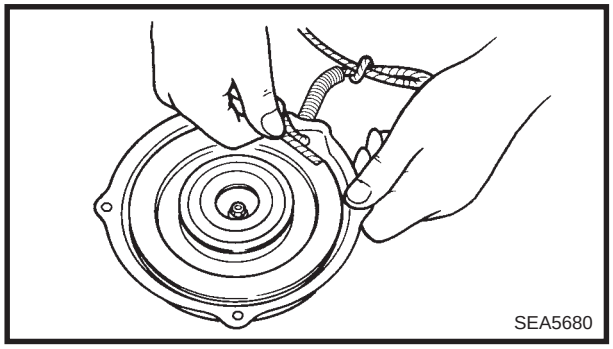

4. Pull about 102 mm (4 in) of starter rope out of the cutout portion in the sheave drum and rotate the sheave drum 4-1/2 times counterclockwise to preload the starter spring.

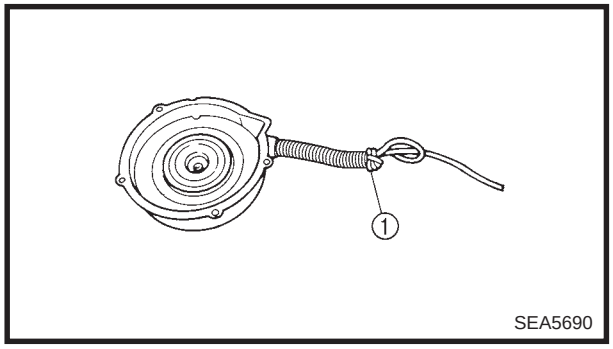

NOTE:

Pass the rope through the case hole and make a knot ① in the rope so that the rope is not pulled into the case.

COOLING SYSTEM

HEAT EXCHANGER

VX600ER/SX600/VT600

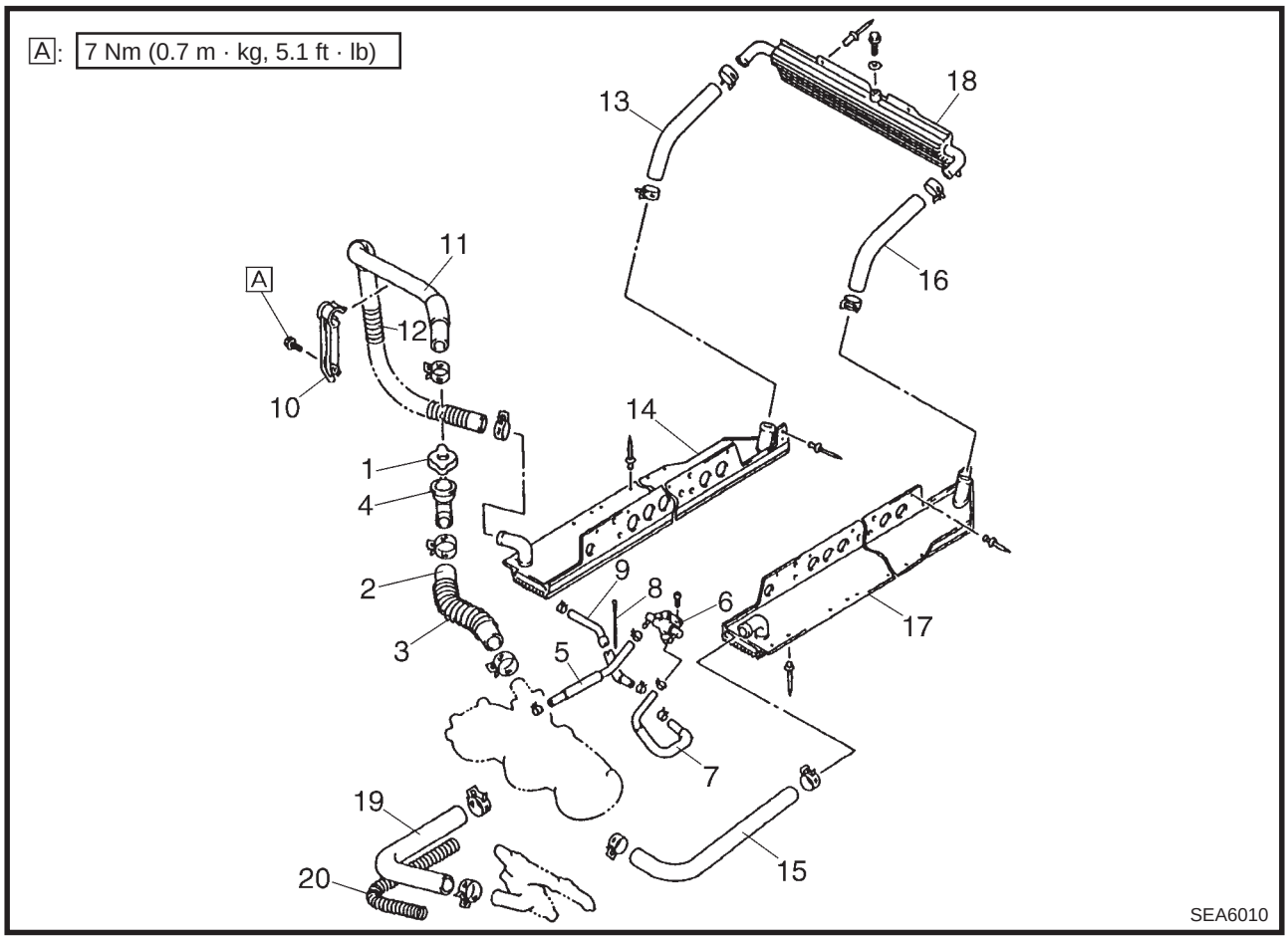

Order	Job name/Part name	Q'ty	Remarks
	Heat exchanger removal Coolant		Remove the parts in the order listed below. Drain. Refer to "COOLING SYSTEM" in CHAPTER 2.
1	Coolant filler cap	1	
2	Coolant hose 1	1	
3	Spring 1	1	
4	Filler cap body	1	
5	Carburetor heating hose 1	1	
6	Carburetor heating lever assembly	1	
7	Carburetor heating hose 2	1	
8	Plastic band	1	
9	Carburetor heating hose 3	1	
10	Coolant hose bracket	1	
11	Coolant hose 2	1	
12	Spring 2	1	
13	Coolant hose 3	1	
14	Heat exchanger (right)	1	
15	Coolant hose 4	1	
16	Coolant hose 5	1	
17	Heat exchanger (left)	1	
18	Heat exchanger (rear)	1	
19	Coolant hose 6	1	
20	Spring 3	1	
			For installation, reverse the removal procedure.

MM600

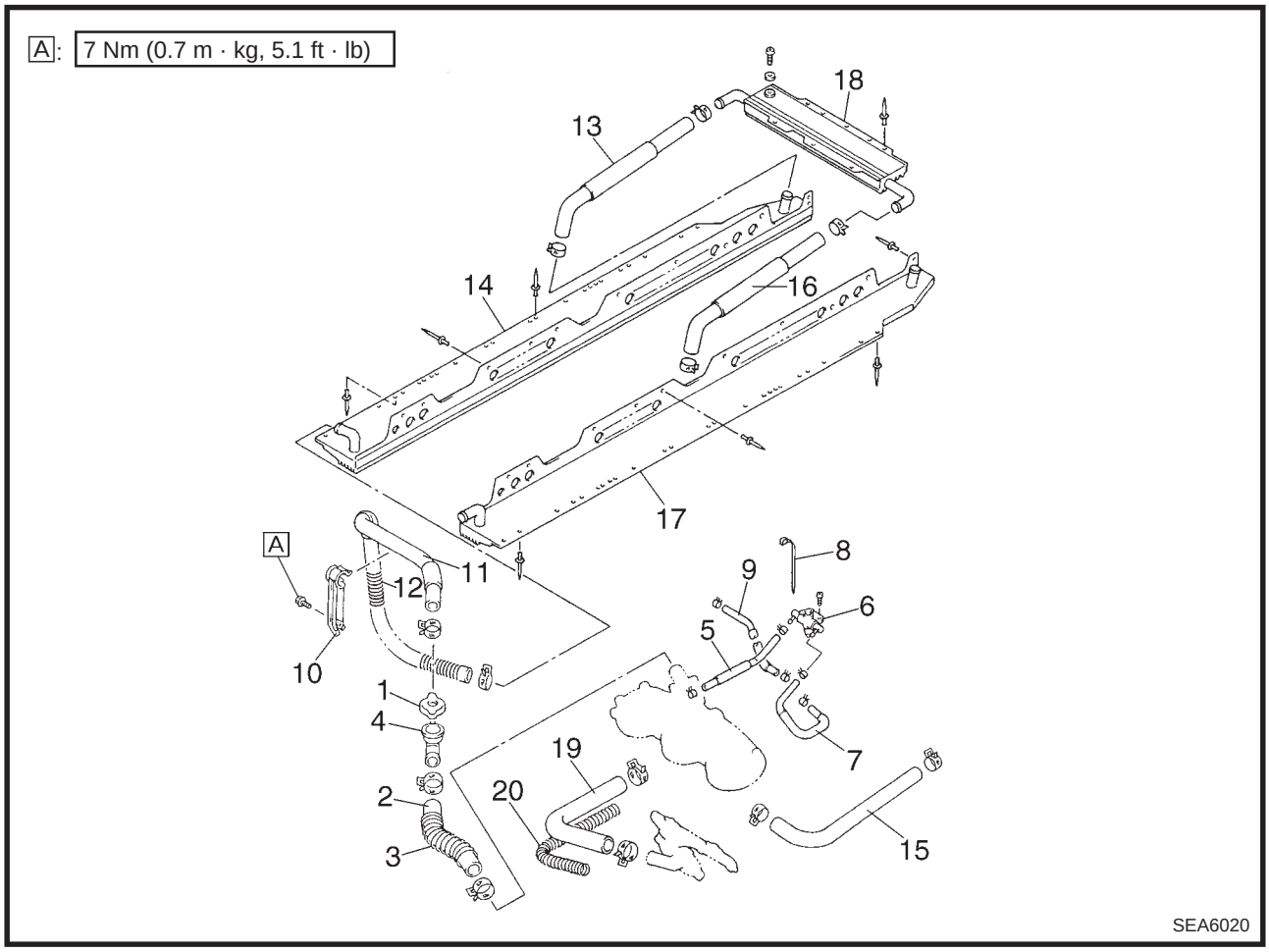

Order	Job name/Part name	Q'ty	Remarks
	Heat exchanger removal Coolant		Remove the parts in the order listed below. Drain. Refer to "COOLING SYSTEM" in CHAPTER 2.
1	Coolant filler cap	1	
2	Coolant hose 1	1	
3	Spring 1	1	
4	Filler cap body	1	
5	Carburetor heating hose 1	1	
6	Carburetor heating lever assembly	1	
7	Carburetor heating hose 2	1	
8	Plastic band	1	
9	Carburetor heating hose 3	1	
10	Coolant hose bracket	1	
11	Coolant hose 2	1	
12	Spring 2	1	
13	Coolant hose 3	1	
14	Heat exchanger (right)	1	
15	Coolant hose 4	1	
16	Coolant hose 5	1	
17	Heat exchanger (left)	1	
18	Heat exchanger (rear)	1	
19	Coolant hose 6	1	
20	Spring 3	1	
			For installation, reverse the removal procedure.

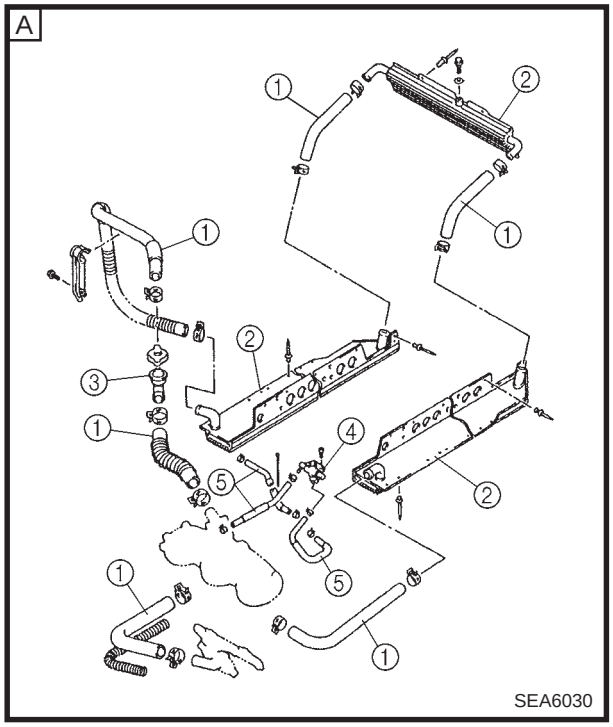

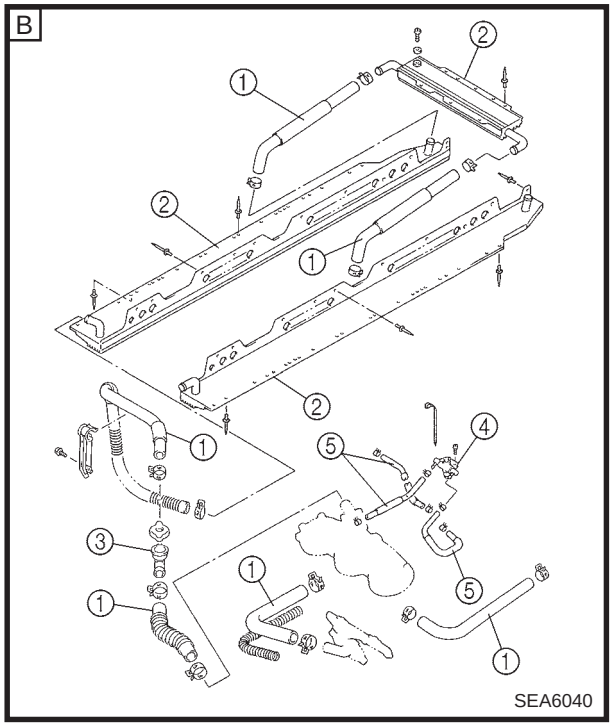

INSPECTION

1. Inspect:
   - Coolant hoses ①
   - Heat exchangers ②
   - Filler cap body ③
   - Carburetor heating lever assembly ④
   - Carburetor heating hoses ⑤
     Cracks/damage → Replace.

A VX600ER/SX600/VT600
B MM600

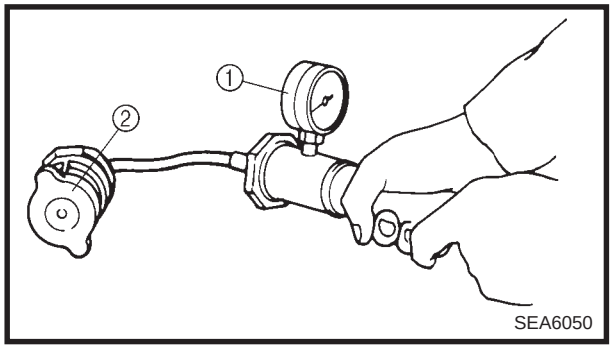

2. Measure:
   - Filler cap opening pressure
     Cap opens with a pressure below the specified pressure → Replace.

Cap opening pressure:
95 ~ 125 kPa
(0.95 ~ 1.25 kg/cm², 14 ~ 18 psi)

Measurement steps:

- Attach the cooling system tester ① to the coolant filler cap ②.

Cooling system tester:
90890-01325, YU-24460-01

- Apply the specified pressure for 10 seconds and make sure there is no pressure drop.

INSTALLATION

1. Install:
   - Heat exchangers
     Use the rivet gun.

WATER PUMP

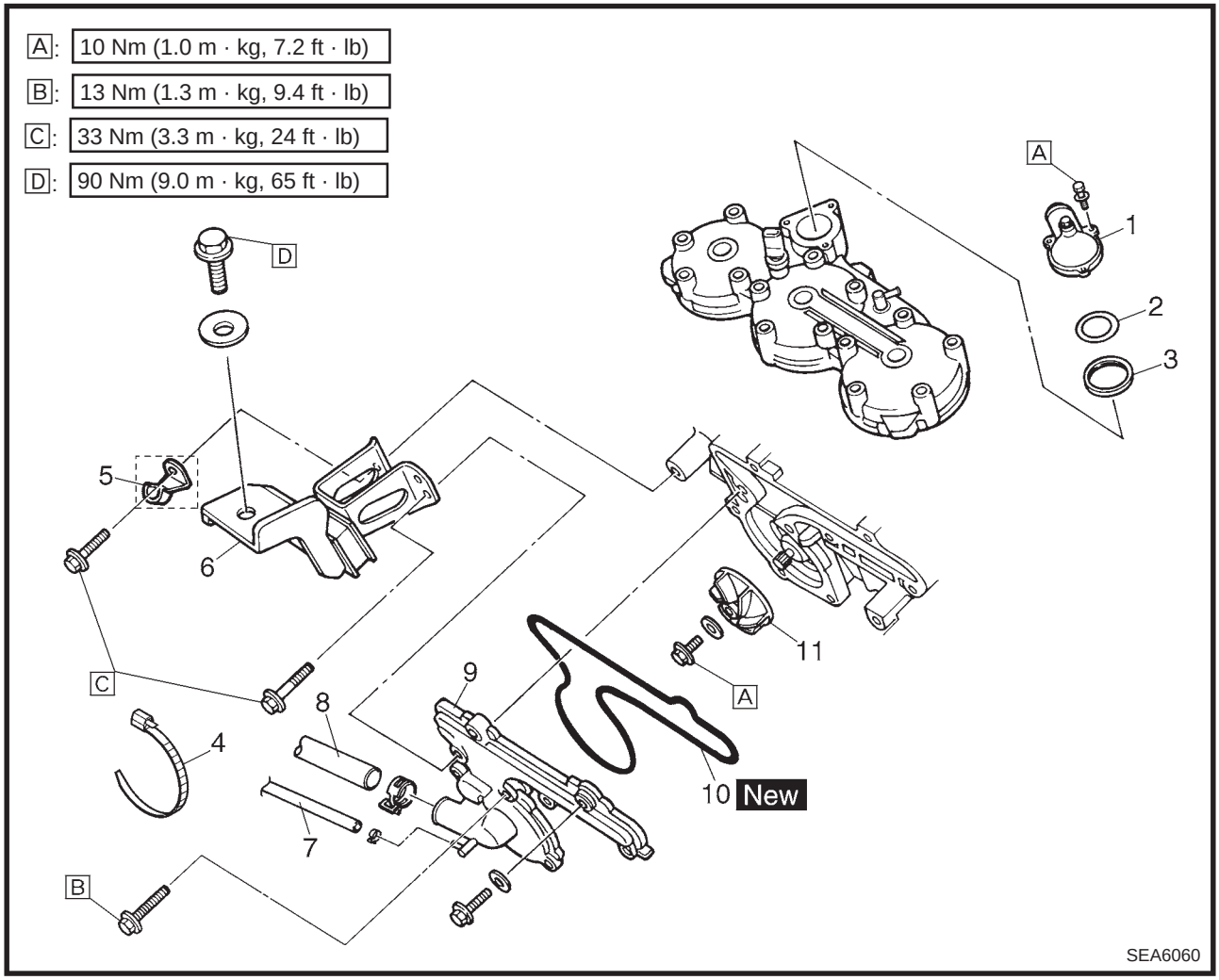

Order	Job name/Part name	Q'ty	Remarks
	Water pump and thermostatic valve removal		Remove the parts in the order listed below.
	Exhaust joint		Refer to "EXHAUST ASSEMBLY" in CHAPTER 5.
	Coolant		Drain. Refer to "COOLING SYSTEM" in CHAPTER 2.
1	Thermostatic cover	1	
2	Plain washer	1	
3	Gasket	1	
4	Plastic band	1	
5	Clamp	1	(VX600ER/VT600)
6	Engine bracket	1	
7	Carburetor heating hose 3	1	
8	Coolant hose 6	1	
9	Water pump cover	1	
10	Gasket	1	
11	Impeller	1	
			For installation, reverse the removal procedure.

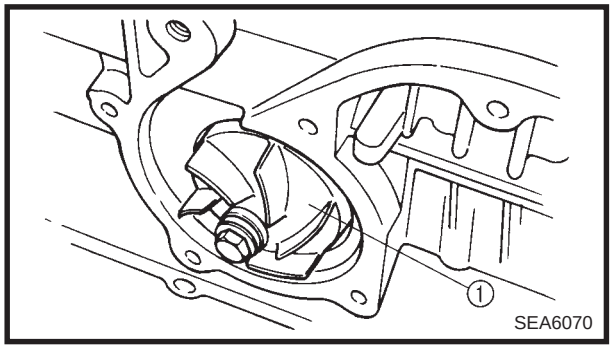

REMOVAL

1. Remove:
   - Impeller ①

NOTE:

Attach the primary sheave holder to hold the primary sheave.

	**Primary sheave holder:** **90890-01701, YS-01880**

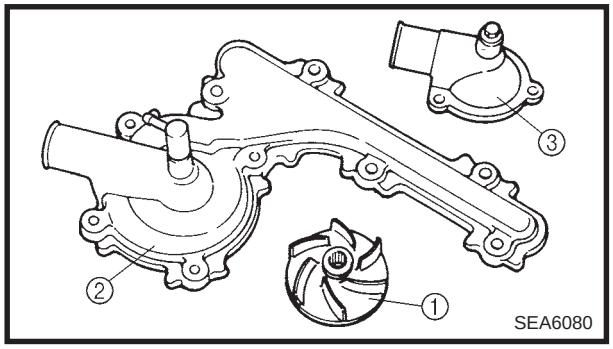

INSPECTION

1. Inspect:
   - Impeller ①
   - Water pump cover ②
   - Thermostatic cover ③
     Cracks/damage → Replace.

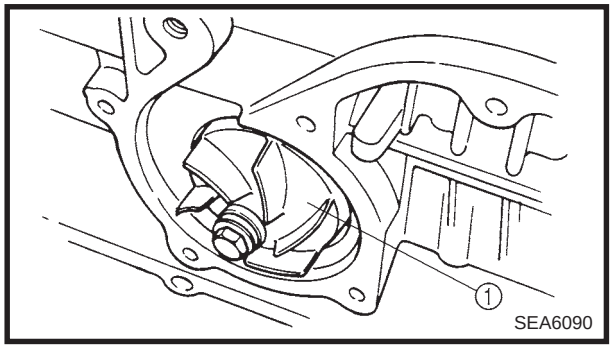

INSTALLATION

1. Install:
   - Impeller ①

NOTE:

Attach the primary sheave holder to hold the primary sheave.

	**Primary sheave holder:** **90890-01701, YS-01880**

	**Bolt (impeller):** **10 Nm (1.0 m · kg, 7.2 ft · lb)**

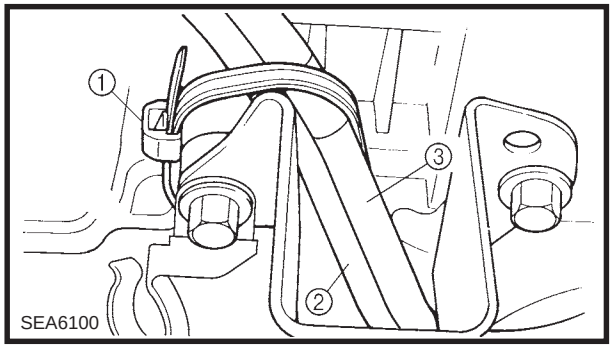

2. Fasten:
   - Plastic band ①

NOTE:

- Fasten the carburetor heating hose 3 ② without squashing it.
- For VX600ER/VT600:
  Clamp the starter motor lead ③ and carburetor heating hose 3 ② together so that the white tape on the starter motor lead ③ is positioned behind the front bracket.

CARBURETION

CARBURETORS

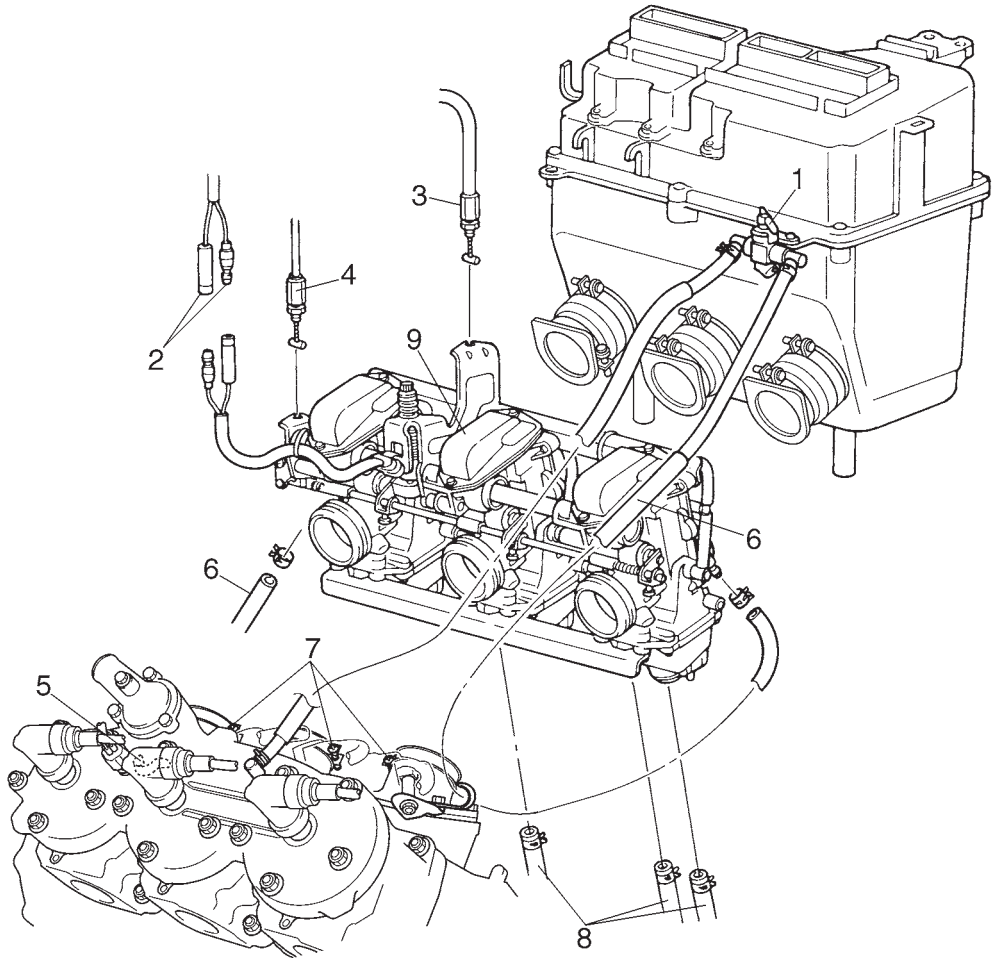

SEA7010

Order	Job name/Part name	Q'ty	Remarks
	Carburetors removal		Remove the parts in the order listed below.
	Intake silencer		Refer to "FUEL PUMP".
1	Carburetor heating lever	1	Before removing the carburetors, make sure that the carburetor heating lever is turned to "OFF".
2	Carburetor switch (T.O.R.S.) lead	2	
3	Throttle cable	1	
4	Starter cable	1	
5	Clamp	1	Unfasten.
6	Carburetor heating hose	2	
7	Clamp screw	3	Loosen.
8	Fuel delivery hose	3	Disconnect.
9	Carburetor	3	
			For installation, reverse the removal procedure.

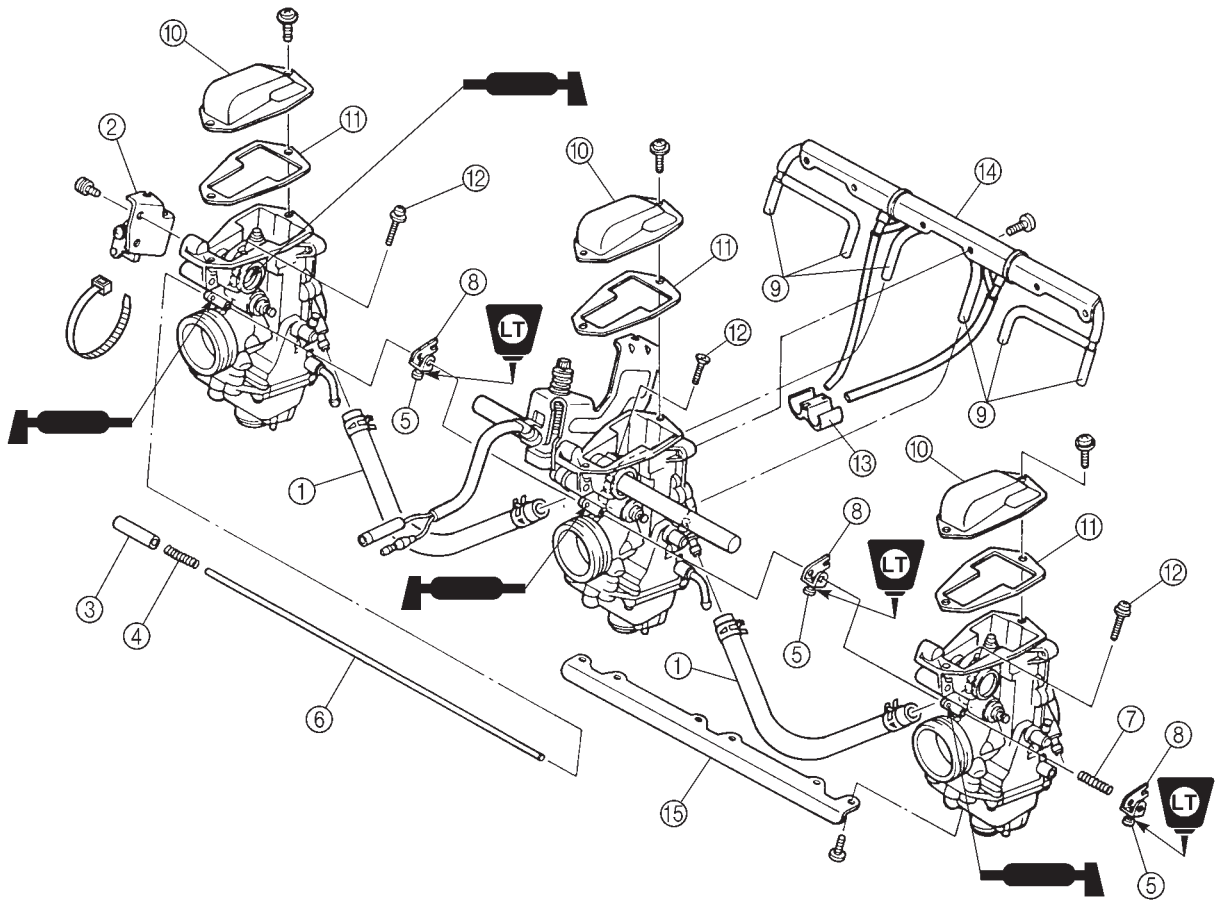

: ① ESSO beacon 325 grease
or Aeroshell grease #7A

SEA7020

Order	Job name/Part name	Q'ty	Remarks
	Carburetor separation		Remove the parts in the order listed below.
①	Carburetor heating hose	2	
②	Starter cable holder	1	
③	Collar	1	
④	Spring	1	
⑤	Screw	3	Loosen.
⑥	Starter rod	1	
⑦	Spring	1	
⑧	Starter lever	3	
⑨	Breather hose	6	
⑩	Top cover	3	
⑪	Gasket	3	
⑫	Throttle shaft connecting screw	3	
⑬	Clamp	1	
⑭	Connecting plate (upper)	1	
⑮	Connecting plate (lower)	1	
			For assembly, reverse the separation procedure.

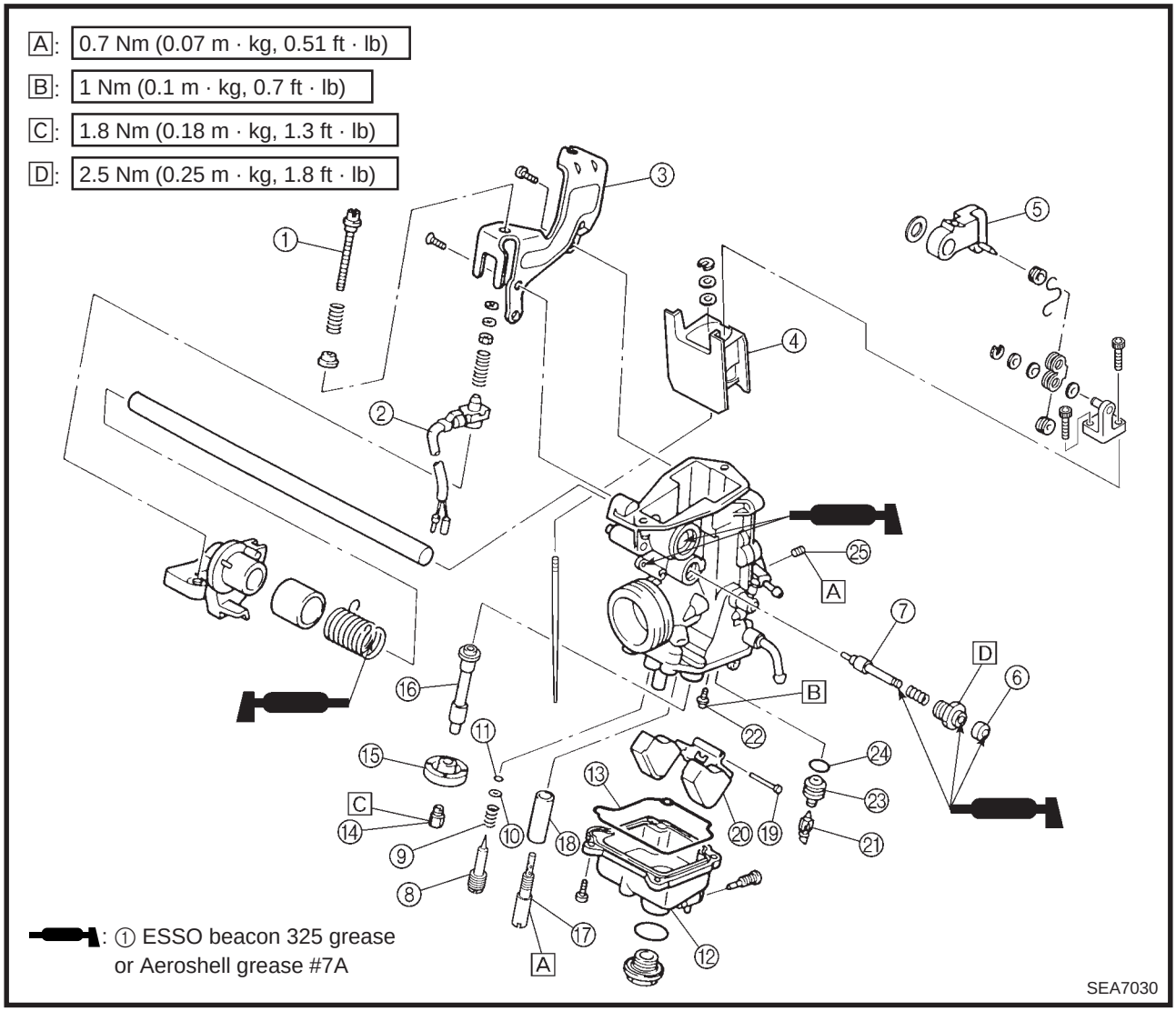

Order	Job name/Part name	Q'ty	Remarks
	Carburetor disassembly		Remove the parts in the order listed below.
①	Throttle stop screw	1	Turn clockwise.
②	Carburetor switch (T.O.R.S.)	1	
③	Throttle cable holder	1	
④	Throttle valve assembly	1	
⑤	Inner throttle lever assembly	1	
⑥	Boot	1	
⑦	Starter plunger assembly	1	
⑧	Pilot mixture screw	1	
⑨	Spring	1	
⑩	Washer	1	
⑪	O-ring	1	
⑫	Float chamber	1	

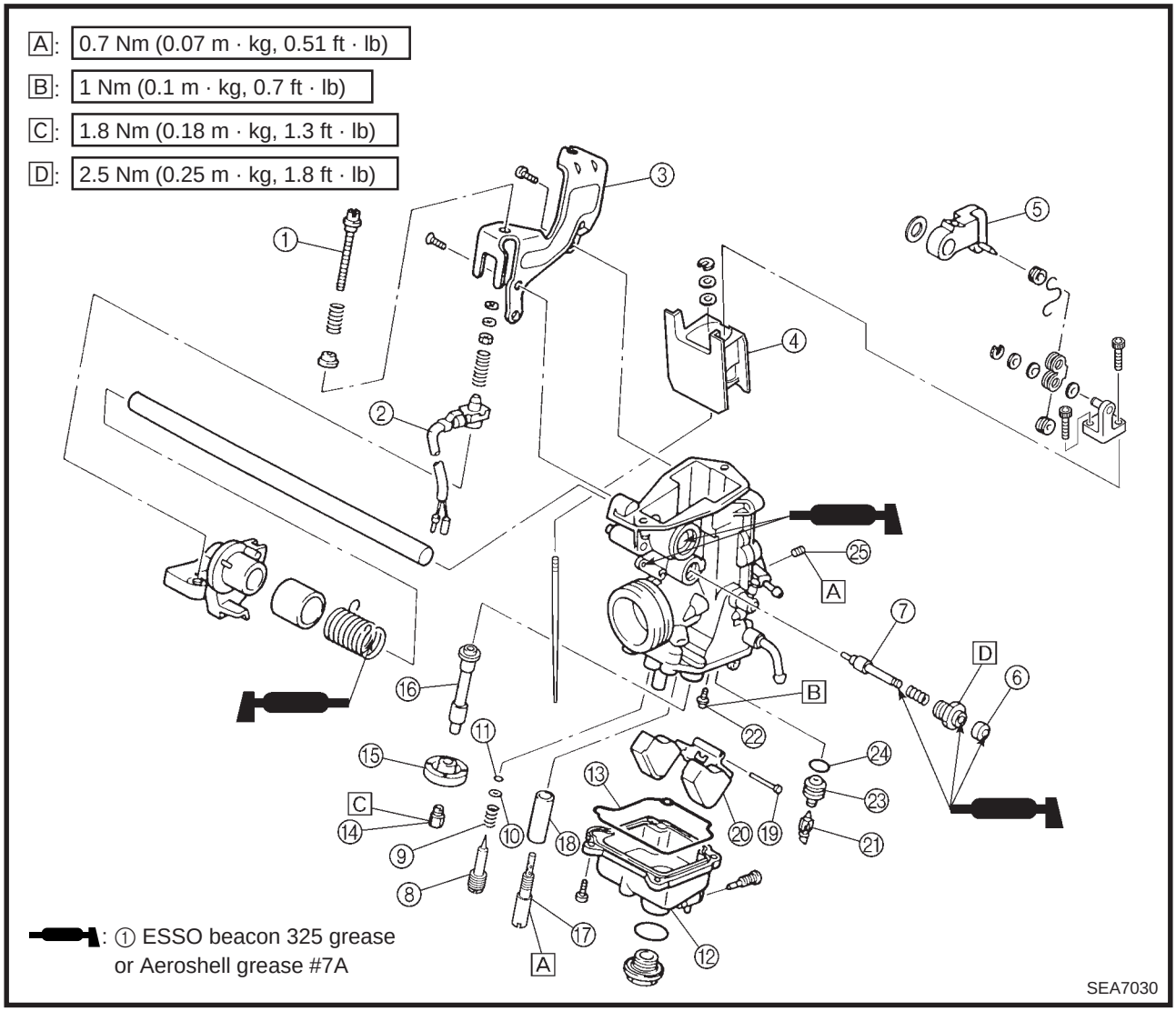

Order	Job name/Part name	Q'ty	Remarks
⑬	Gasket	1	
⑭	Main jet	1	
⑮	Main jet ring	1	
⑯	Main nozzle	1	
⑰	Pilot jet	1	
⑱	Pilot jet sleeve	1	
⑲	Float pin	1	
⑳	Float	1	
㉑	Needle valve	1	
㉒	Screw (valve seat)	1	
㉓	Valve seat assembly	1	
㉔	O-ring	1	
㉕	Pilot air jet	1	
			For assembly, reverse the disassembly procedure.

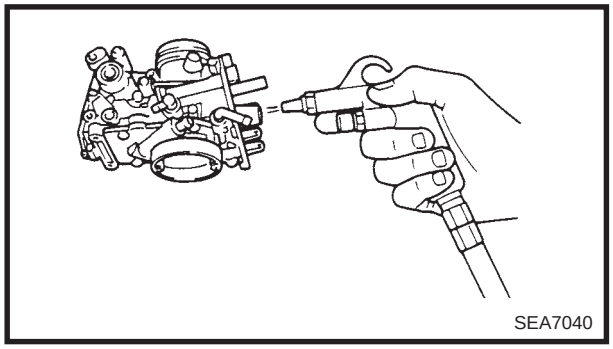

INSPECTION

1. Inspect:
   - Carburetor body
   - Fuel passage
     Contamination → Clean.

NOTE:

- Use a petroleum based solvent for cleaning.
- Blow out all passages and jets with compressed air.

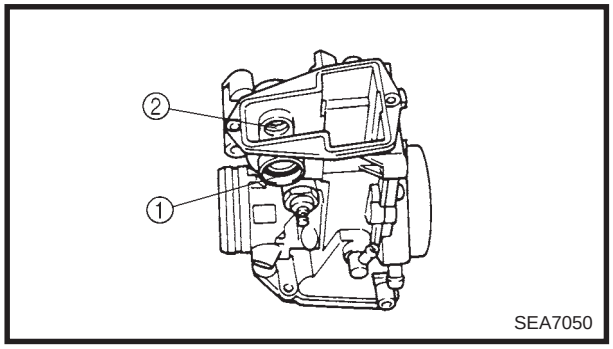

2. Inspect:
   - Rubber seals ①
   - Bearing ②
     Wear/damage → Replace.

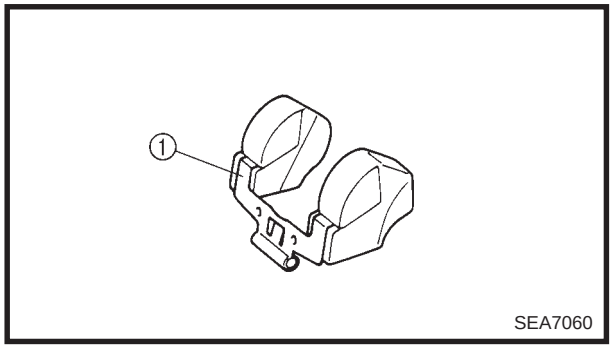

3. Inspect:
   - Float ①
     Damage → Replace.

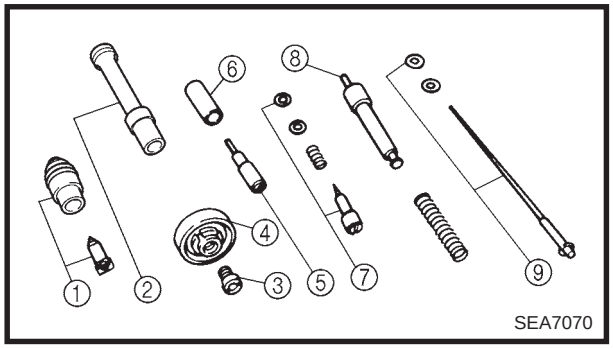

4. Inspect:
   - Valve seat assembly ①
   - Main nozzle ②
   - Main jet ③
   - Main jet ring ④
   - Pilot jet ⑤
   - Pilot jet sleeve ⑥
   - Pilot mixture screw assembly ⑦
   - Starter plunger assembly ⑧
   - Jet needle ⑨
     Bends/wear/damage → Replace.
     Blockage → Blow out the jets with compressed air.

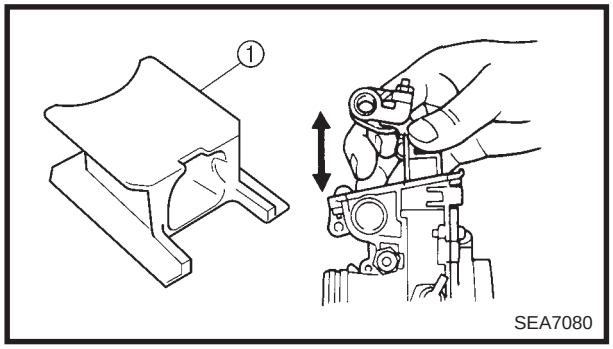

5. Inspect:
   - Throttle valve ①
     Wear/damage → Replace.
6. Check:
   - Throttle valve movement
     Sticks → Replace carburetor body assembly.

ASSEMBLY

NOTE:

- Before reassembling, wash all parts in clean gasoline.
- Always use new gaskets and O-rings.

1. Tighten:
   - Inner parts

Pilot air jet:
0.7 Nm (0.07 m · kg, 0.51 ft · lb)
Screw (valve seat):
1 Nm (0.1 m · kg, 0.7 ft · lb)
Pilot jet:
0.7 Nm (0.07 m · kg, 0.51 ft · lb)
Main jet:
1.8 Nm (0.18 m · kg, 1.3 ft · lb)
Starter plunger assembly:
2.5 Nm (0.25 m · kg, 1.8 ft · lb)

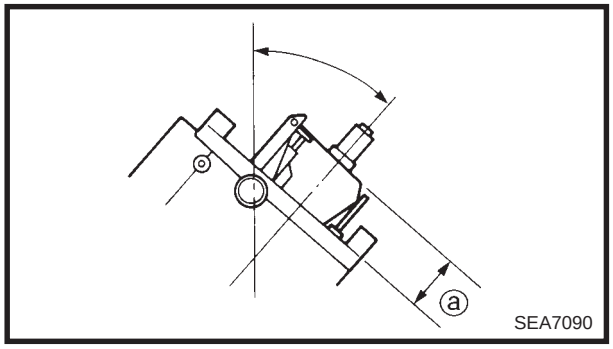

2. Measure:
   - Float height ⓐ
     Out of specification → Adjust.

Float height:
11.3 ~ 15.3 mm (0.44 ~ 0.60 in)

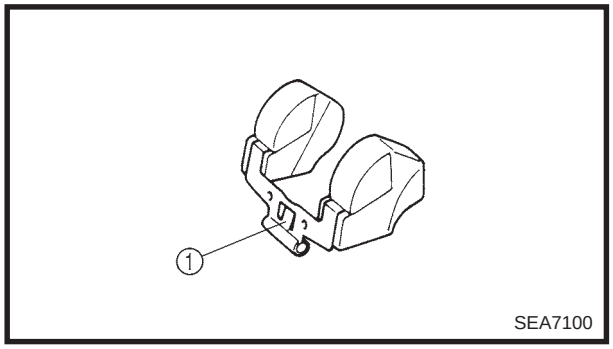

Measurement and adjustment steps:

- Hold the carburetor upside down.
- Measure the distance between the carburetor body and top of the floats.

NOTE:

The float arm should resting on the needle valve without exerting pressure on it.

- If the float height is not within specification, inspect the valve seat and needle valve.
- If either is worn, replace them both.
- If both are fine, adjust the float height by bending the float arm tang ① on the float.
- Recheck the float height.

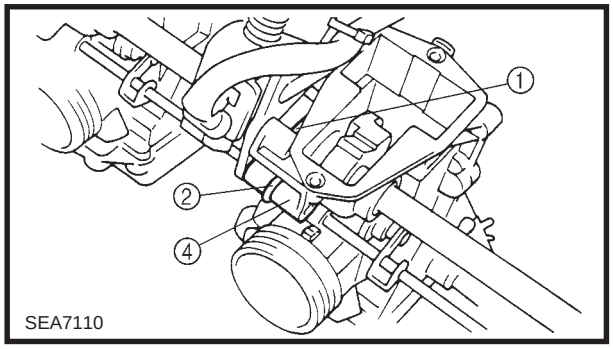

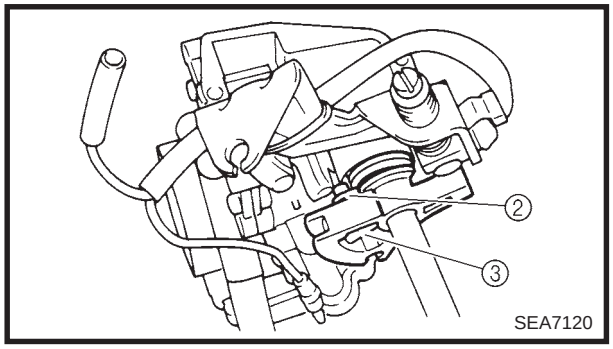

3. Install:
   - Return springs ①
   - Carburetors (No.1, No.3)

NOTE:

Hook the spring hooks ② to the projections on the connecting lever ③ and carburetor body ④ while twisting the spring clockwise approximately 315 degrees.

CARBURETOR SYNCHRONIZATION

1. Adjust:
   - Carburetor synchronization
     Refer to “CARBURETOR SYNCHRONIZATION” in CHAPTER 2.

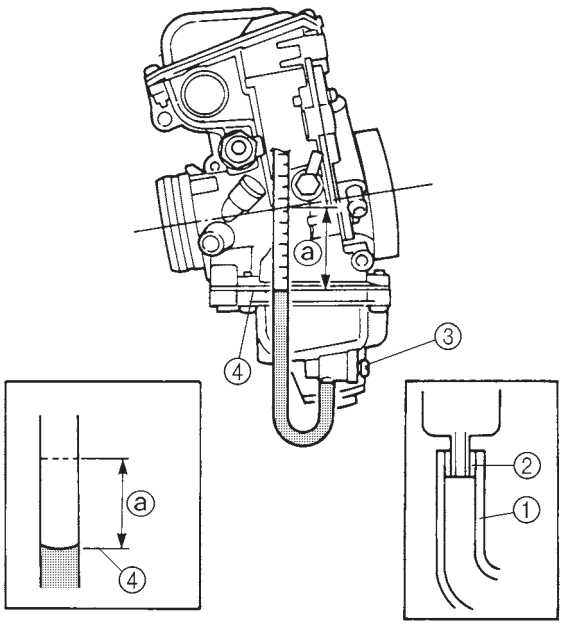

SEA7130

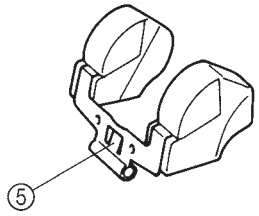

SEA7140

FUEL LEVEL ADJUSTMENT

1. Measure:
   - Fuel level ⓐ
     Out of specification → Adjust.

	Fuel level (from the bore center): **36 ~ 38 mm (1.42 ~ 1.50 in)**

Measurement and adjustment steps:

- Place the machine on a level surface.
- Attach the fuel level gauge ① to the float chamber nozzle.

	Fuel level gauge: **90890-01312, YM-01312-A**

NOTE:

Use the adapter (outside diameter ø6 hose) ② when attaching the fuel level gauge.

- Loosen the drain screw ③ and start the engine.
- Place the tube along the seam line ④ of the carburetor body.
- Measure the fuel level ⓐ with the gauge.
- If the fuel level is incorrect, adjust the fuel level.
- Remove the carburetor.
- Inspect the valve seat and needle valve.
- If either is worn, replace them both.
- If both are fine, adjust the float height by bending the float tang ⑤ on the float.
- Recheck the fuel level.

INSTALLATION

NOTE:

After installing all parts, refer to “CABLE ROUTING” in CHAPTER 9, to check the cable, lead and hose routings.

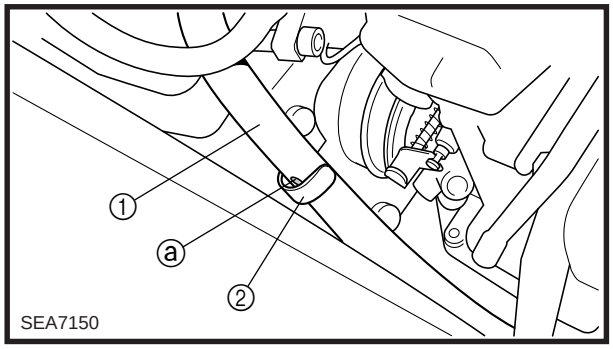

1. Fasten:
   - Carburetor heating hose 2 ①

NOTE:

Fasten the carburetor heating hose 2 with a clamp ② at the white mark ⓐ.

2. Bleed:
   - Cooling system
     Refer to “COOLING SYSTEM” in CHAPTER 2.
3. Adjust:
   - Starter cable free play
     Refer to “STARTER (CHOKE) CABLE FREE PLAY ADJUSTMENT” in CHAPTER 2.
4. Adjust:
   - Throttle cable free play
     Refer to “THROTTLE CABLE FREE PLAY ADJUSTMENT” in CHAPTER 2.

FUEL PUMP

VX600ER/VT600

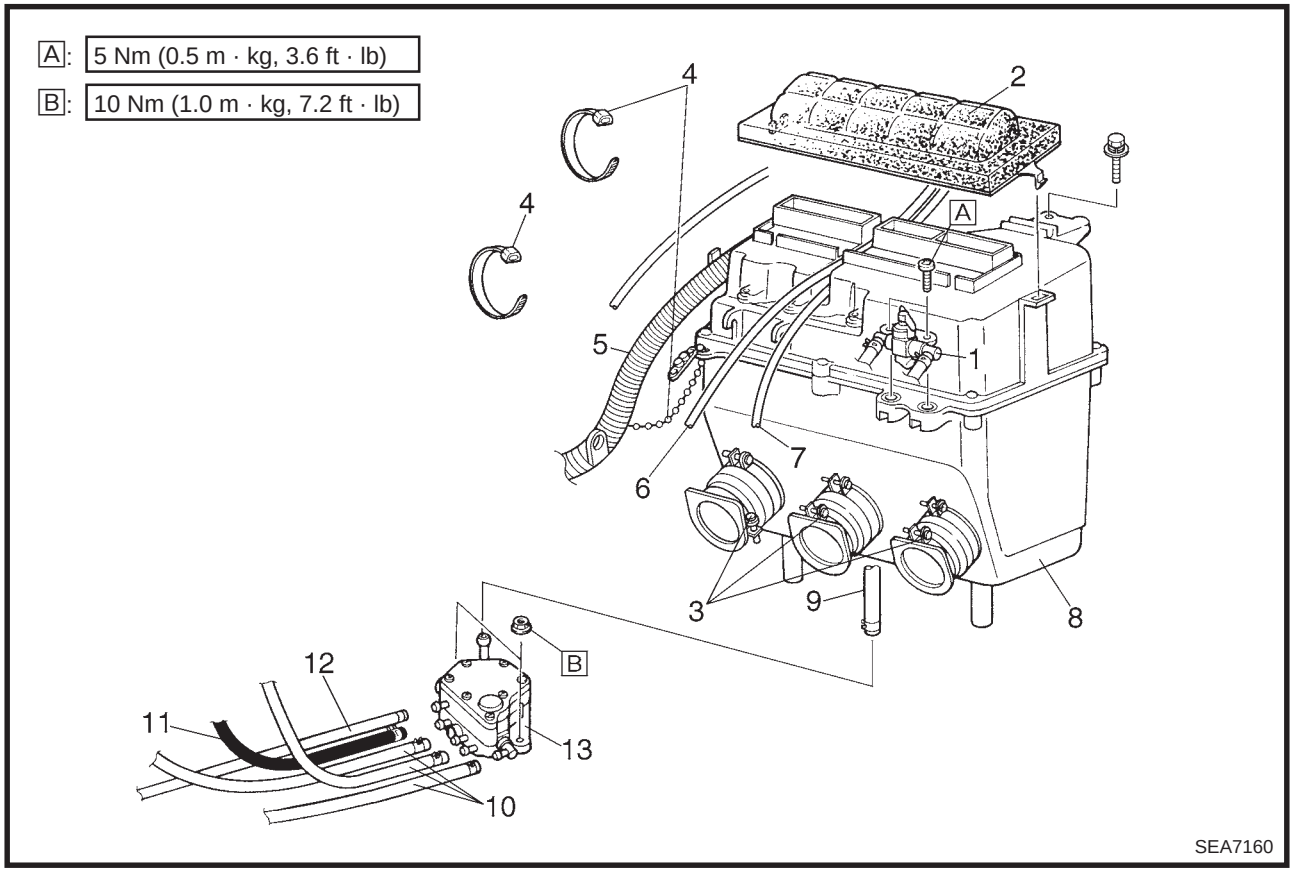

Order	Job name/Part name	Q'ty	Remarks
	Fuel pump removal		Remove the parts in the order listed below.
1	Carburetor heating lever assembly	1	
2	Air filter element	1	
3	Screw	3	Loosen.
4	Plastic band	3	
5	Wire harness	1	
6	Throttle cable	1	**NOTE:**
7	Oil pump cable	1	• First, remove the throttle and oil pump cables from the cable guide on the steering column. • When removing the intake silencer, lift up the throttle and oil pump cables.
8	Intake silencer	1	
9	Fuel hose	1	Disconnect.
10	Fuel delivery hose	3	Disconnect.
11	Vacuum hose	1	Disconnect.
12	Oil delivery hose	1	Disconnect.
13	Fuel pump assembly	1	
			For installation, reverse the removal procedure.

SX600/MM600

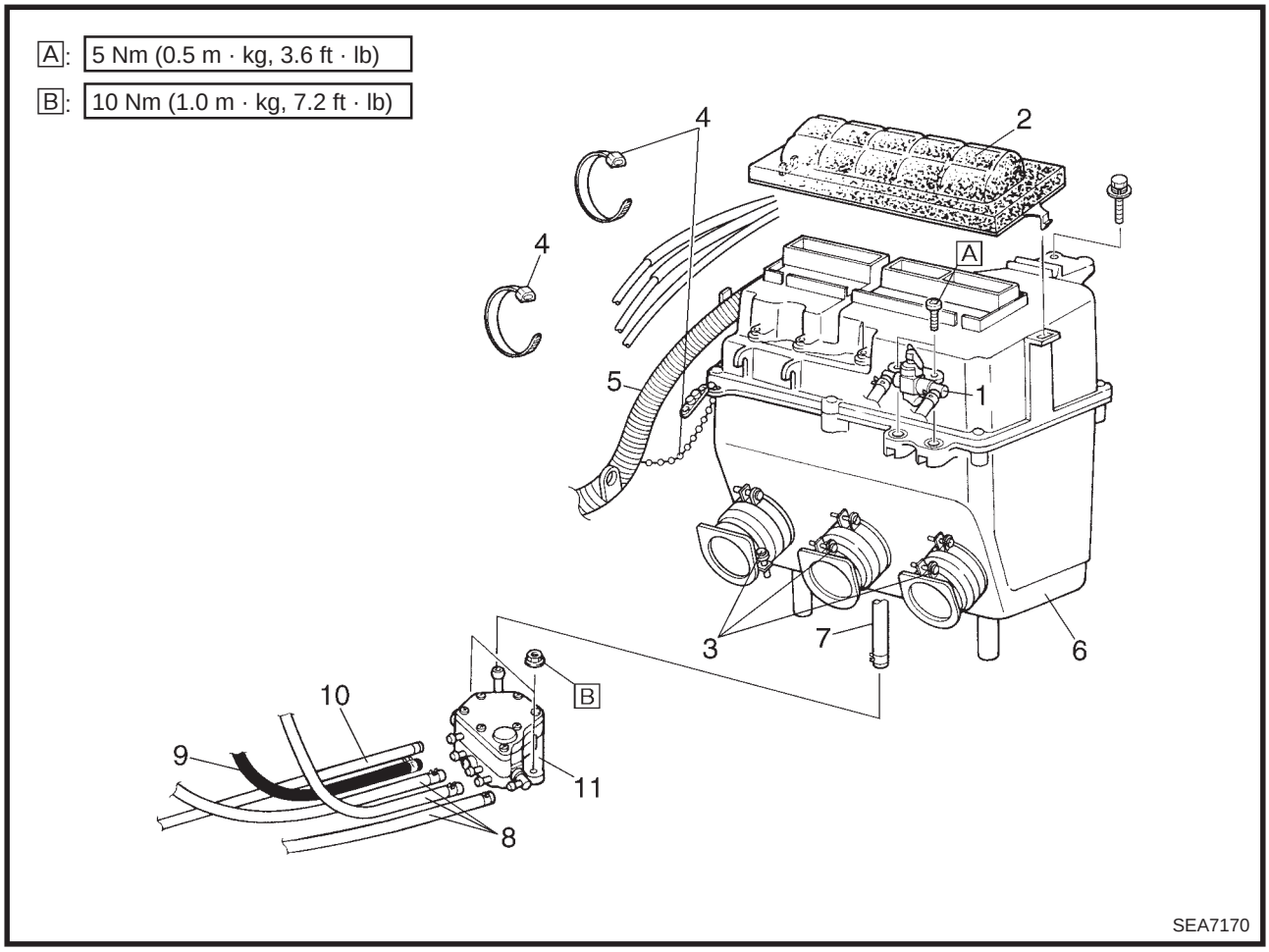

Order	Job name/Part name	Q'ty	Remarks
	Fuel pump removal		Remove the parts in the order listed below.
1	Carburetor heating lever assembly	1	
2	Air filter element	1	
3	Screw	3	Loosen.
4	Plastic band	3	
5	Wire harness	1	
6	Intake silencer	1	
7	Fuel hose	1	Disconnect.
8	Fuel delivery hose	3	Disconnect.
9	Vacuum hose	1	Disconnect.
10	Oil delivery hose	1	Disconnect.
11	Fuel pump assembly	1	
			For installation, reverse the removal procedure.

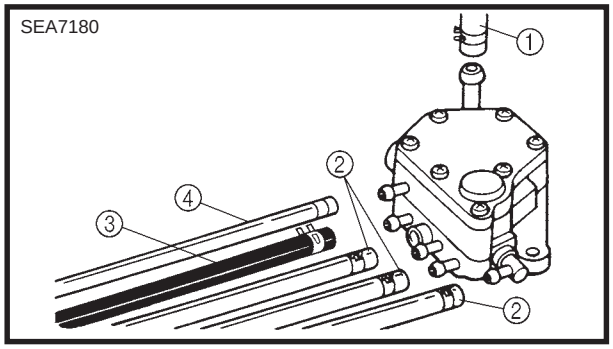

INSPECTION

1. Inspect:
   - Fuel hose ①
   - Fuel delivery hoses ②
   - Vacuum hose ③
   - Oil delivery hose ④
     Clogs/damage → Replace.

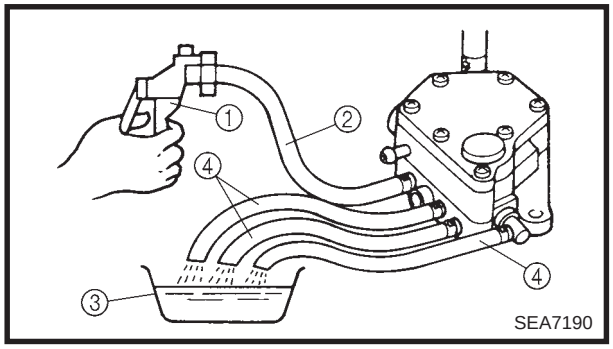

2. Check:
   - Fuel pump operation

Checking steps:

- Connect the Mity vac ① to the vacuum hose ②.

	Mity vac: **90890-06756, YS-42423**

- Place a container ③ under the end of the fuel delivery hoses ④.
- Operate the Mity vac ① while checking that fuel flows from the fuel delivery hoses ④.
- If fuel does not flow out, replace the fuel pump.

INSTALLATION

NOTE:

After installing all parts, refer to “CABLE ROUTING” in CHAPTER 9, to check the cable, lead and hose routings.

1. Bleed:
   - Oil system
     Refer to “OIL PUMP” in CHAPTER 2.

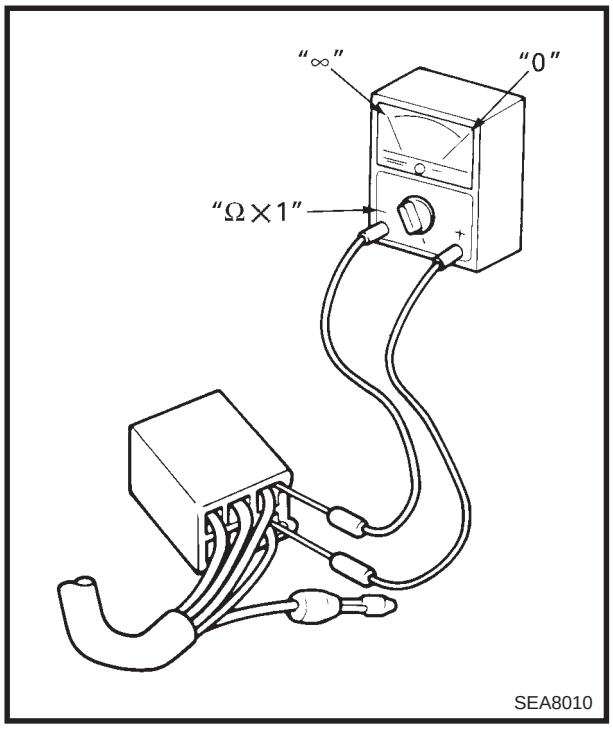

ELECTRICAL

SWITCH INSPECTION

SWITCH INSPECTION

Use a pocket tester to check the terminals for continuity. If the continuity is faulty at any point, replace the switch.

Pocket tester:
90890-03112, YU-03112

NOTE:

- Set the pocket tester to "0" before starting a test.
- When testing the switch for continuity the pocket tester should be set to the "× 1" Ω range.
- When checking the switch turn it on and off a few times.

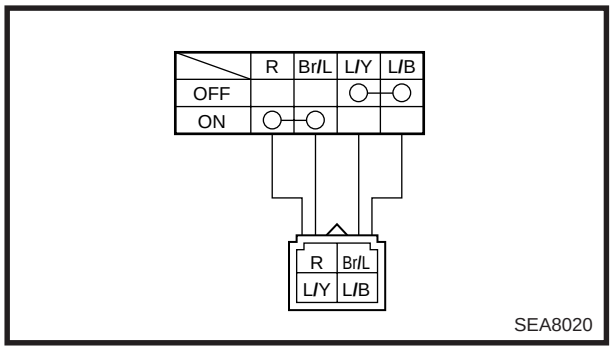

INSPECTING A SWITCH SHOWN IN THE MANUAL

The terminal connections for switches (main switch, handlebar switch, engine stop switch, light switch, etc.) are shown in a chart similar to the one on the left. This chart shows the switch positions in the column and the switch lead colors in the top row.
For each switch position, "○——○" indicates the terminals with continuity.

The example chart shows that:

① There is continuity between the "Blue/Yellow and Blue/Black" leads when the switch is set to "OFF".
② There is continuity between the "Red and Brown/Blue" leads when the switch is set to "ON".

IGNITION SYSTEM
CIRCUIT DIAGRAM

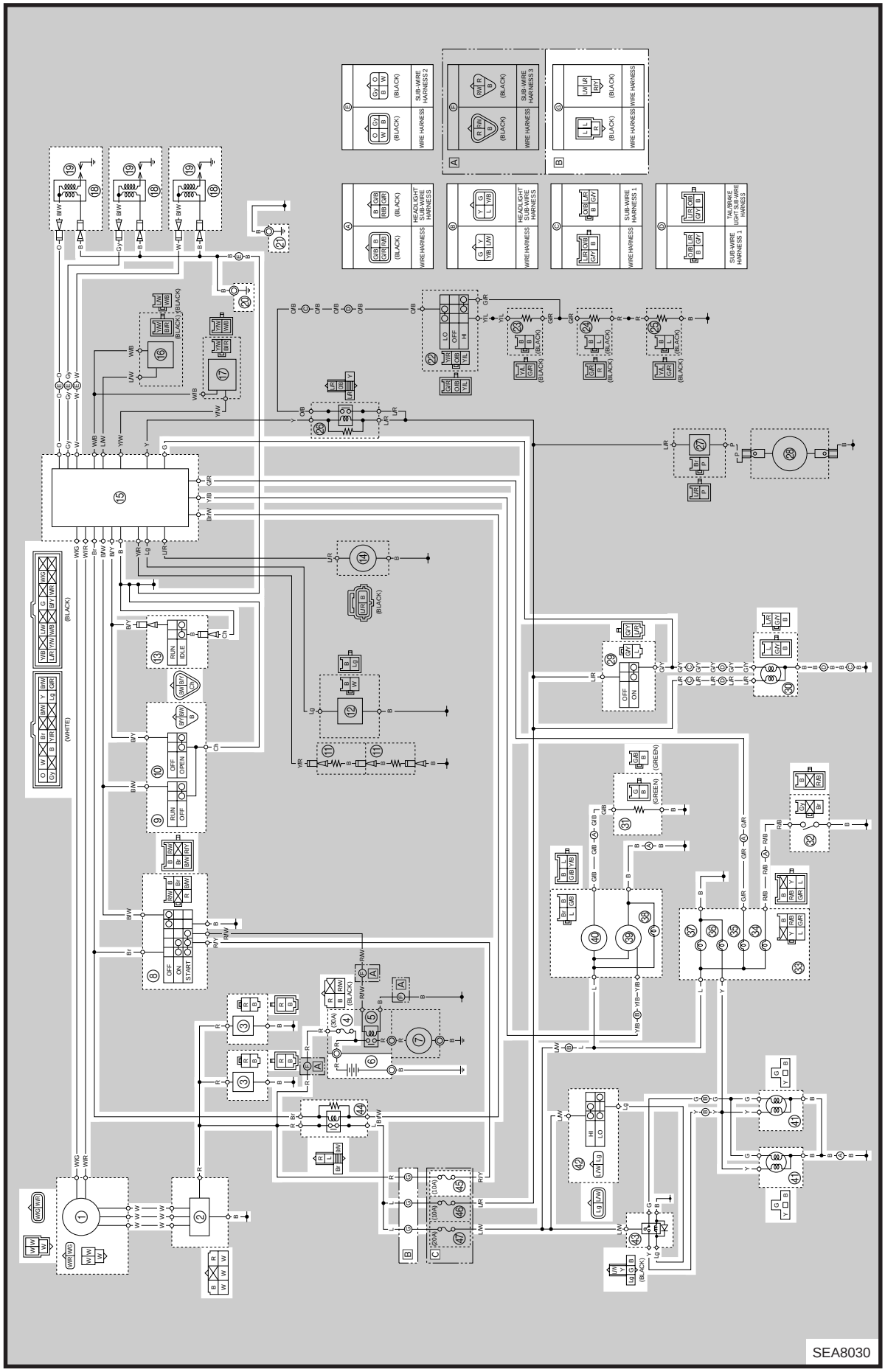

IGNITION SYSTEM

CIRCUIT DIAGRAM

① AC magneto
② Rectifier/regulator
③ Condenser*1
④ Main fuse*2
⑥ Battery*2
⑧ Main switch
⑨ Engine stop switch
⑩ Throttle switch
⑬ Carburetor switch
⑮ CDI unit
⑱ Ignition coil
⑲ Spark plug
⑳ Engine ground
㉑ Frame ground
㉙ Brake light switch
㉚ Tail/brake light
㉛ Fuel sender
㉜ Oil level switch
㉝ Speedometer
㉞ Oil level indicator light
㉟ Water temperature indicator light
㊱ High beam indicator light
㊲ Speedometer light
㊳ Tachometer light
㊴ Tachometer
㊵ Fuel meter
㊶ Headlight
㊷ Headlight beam switch
㊸ Headlight relay (with the black coupler)
㊹ Load control relay (with the white coupler)
㊺ "IGNITION" fuse*2
*1 SX600/MM600
*2 VX600ER/VT600

B SX600/MM600
C VX600ER/VT600

TROUBLESHOOTING

NO SPARK OR WEAK SPARK.

For VX600ER/VT600:
Check the main fuse and
“IGNITION” fuse.
Refer to “FUSE INSPECTION”
in CHAPTER 2.

OK ⇩ FAULTY ⇨ Replace the main fuse and/or “IGNITION” fuse.

For VX600ER/VT600:
Check the battery.
Refer to “BATTERY INSPECTION”
in CHAPTER 2.

OK ⇩ OUT OF SPECIFICATION ⇨ Replace and/or charge the battery.
Refer to “BATTERY CHARGING” in CHAPTER 2.

For SX600/MM600:
Check the condenser.

OK ⇩ OUT OF SPECIFICATION ⇨ Replace the condenser.

Check the stator coil and pickup coil.

OK ⇩ OUT OF SPECIFICATION ⇨ Replace the stator coil assembly.

Check the spark plug gap.

OK ⇩ OUT OF SPECIFICATION ⇨ Repair or replace the spark plug.

Check the spark plug cap resistance.

OK ⇩ OUT OF SPECIFICATION ⇨ Replace the spark plug cap.

Check the ignition coil resistance.

OK ⇩ OUT OF SPECIFICATION ⇨ Replace the ignition coil.

Check the engine stop switch, throttle
switch, carburetor switch and main
switch.

OK ⇩ FAULTY ⇨ Replace the handlebar switch (right), carburetor switch, and/or main switch.

Check the load control relay.

OK ⇩ FAULTY ⇨ Replace the load cotrol relay.

*

*

For SX600/MM600:
Check the lighting, signal and meter system.
Refer to “LIGHTING SYSTEM” and
“SIGNAL SYSTEM”.

OK

Correct the connection and/or
replace the rectifier/regulator
and/or CDI unit.

FAULTY → Repair the lighting system and/or signal system and/or meter system.

NOTE:

For SX600/MM600:
If a short circuit occurred in the lighting system, the signal system, or the meter system, the engine can be started in an emergency by cutting off the load control relay.

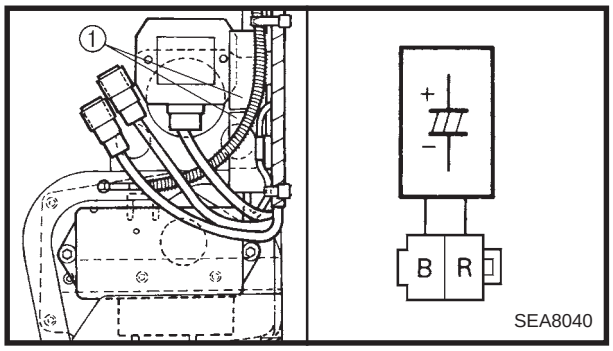

CONDENSER (SX600/MM600)

1. Disconnect:
   - Condenser ①
2. Connect:
   - Condenser
     (to the LCR meter)
3. Measure:
   - Condenser capacity
     Out of specification → Replace.

Condenser capacity:
6,800 μF at 20°C (68°F)

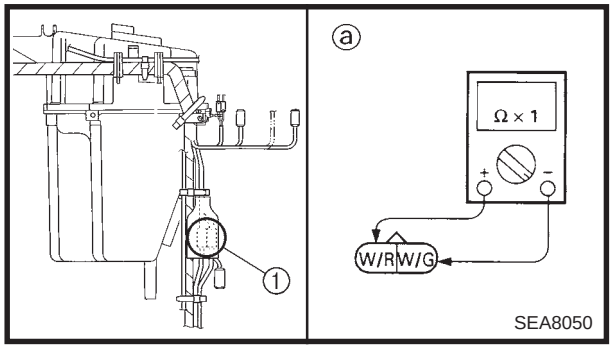

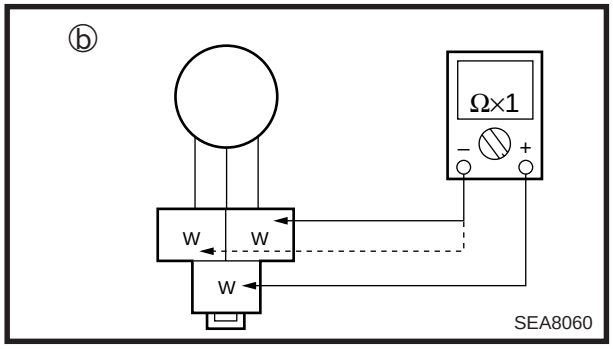

AC MAGNETO

1. Disconnect:
   - AC magneto couplers ①
2. Connect:
   - Pocket tester
     (to the AC magneto coupler)
3. Measure:
   - Pickup coil resistance ⓐ
   - Stator coil resistance ⓑ
     Out of specification → Replace.

Pickup coil resistance:
(White/Red – White/Green)
189 ~ 231 Ω at 20°C (68°F)
Stator coil resistance:
(White – White)
0.36 ~ 0.44 Ω at 20°C (68°F)

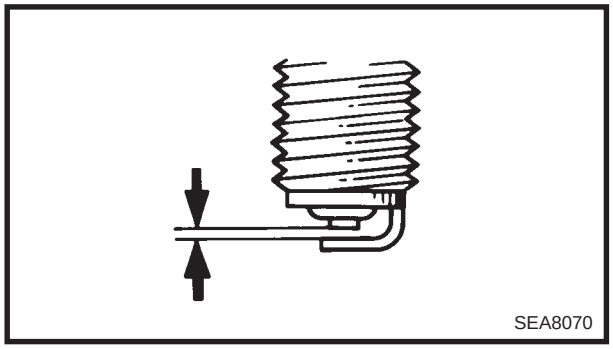

SPARK PLUG

1. Remove:
   - Spark plugs
2. Measure:
   - Spark plug gap

Standard spark plug:
BR9ES (NGK)

Spark plug gap:
0.7 ~ 0.8 mm (0.028 ~ 0.031 in)

SPARK PLUG CAP

1. Remove:
   - Spark plug cap
2. Connect:
   - Pocket tester
     (to the spark plug cap)
3. Measure:
   - Spark plug cap resistance
     Out of specification → Replace.

Spark plug cap resistance:
5 kΩ at 20°C (68°F)

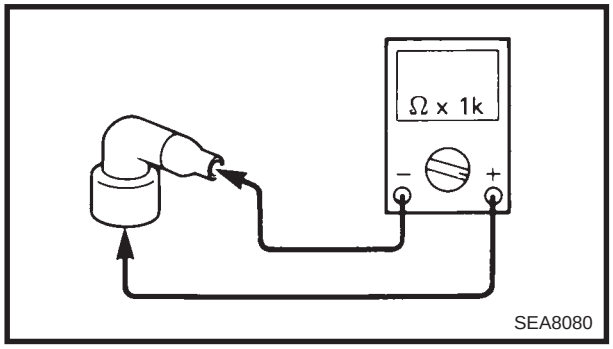

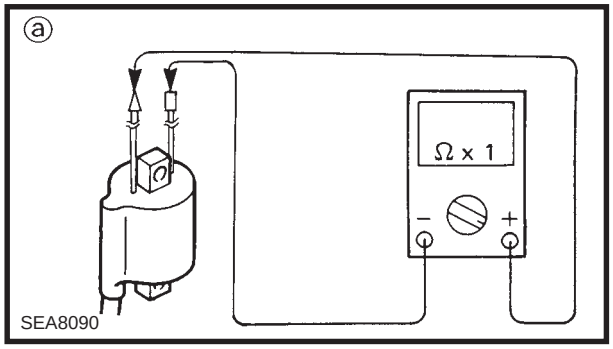

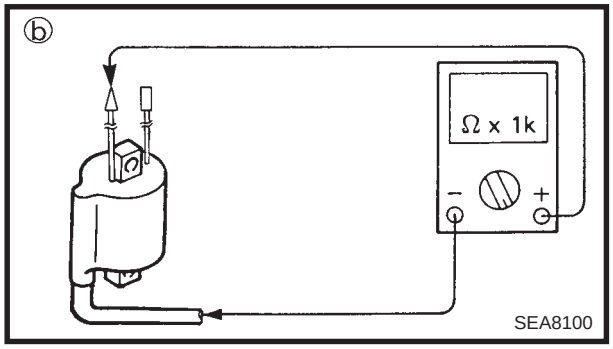

IGNITION COIL

1. Disconnect:
   - Ignition coil lead
   - Spark plug lead
2. Connect:
   - Pocket tester
     (to the ignition coil and spark plug lead)
3. Measure:
   - Primary coil resistance ⓐ
   - Secondary coil resistance ⓑ
     Out of specification → Replace.

Primary coil resistance:
0.36 ~ 0.48 Ω at 20°C (68°F)
Secondary coil resistance:
5.4 ~ 7.4 kΩ at 20°C (68°F)

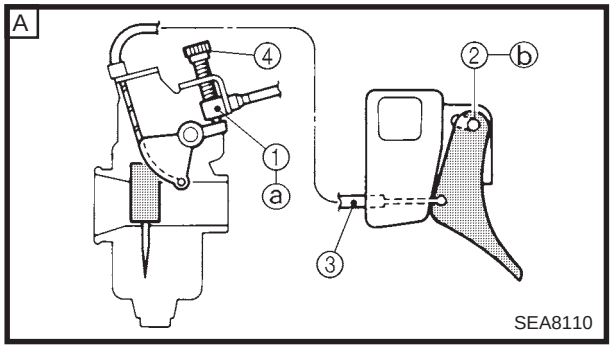

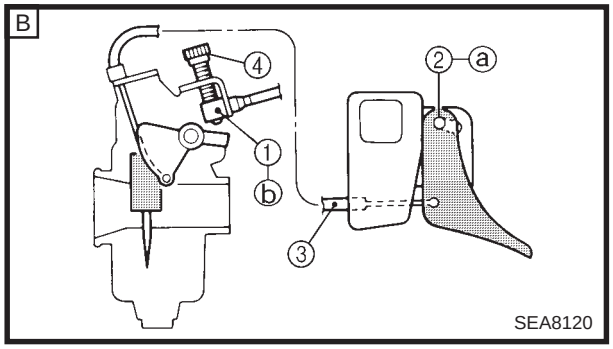

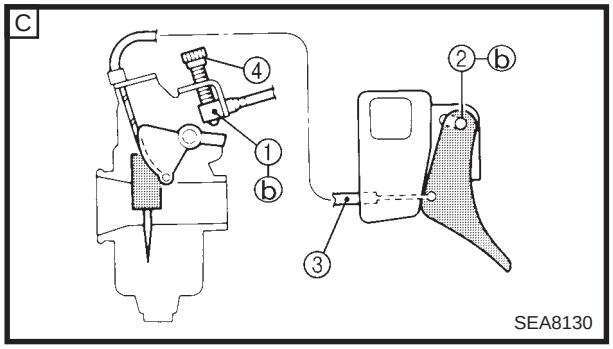

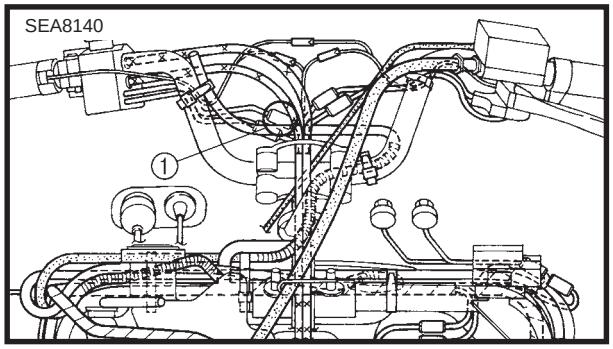

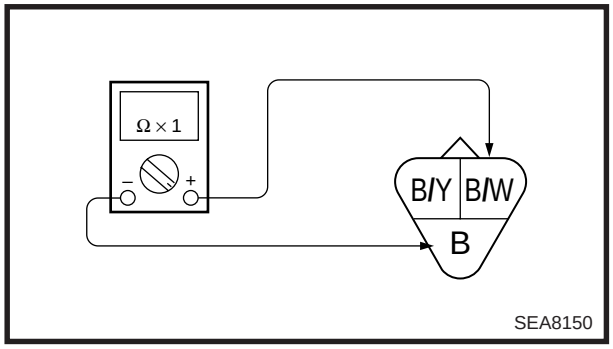

THROTTLE OVERRIDE SYSTEM (T.O.R.S.)

If the carburetor or throttle cable should malfunction during operation, T.O.R.S. will operate when the throttle lever is released.

T.O.R.S. is designed to interrupt the ignition and keep the engine revolutions between 2,800 and 3,000 r/min if the carburetor fails to return to idle when the lever is released.

⚠ WARNING

- **If T.O.R.S. operates, make sure that the cause of the malfunction is corrected and that the engine can be operated without a problem before restarting the engine.**
- **Be sure to use the standard resistance-type spark plug and spark plug cap. Otherwise, T.O.R.S. will not work properly.**

Switch \ Status	A Idling or starting	B Running	C Trouble
Throttle switch	OFF	ON	OFF
Carburetor switch	ON	OFF	OFF
Engine	Running	Running	T.O.R.S. operating

① Carburetor switch
② Throttle switch
③ Throttle cable
④ Throttle stop screw
ⓐ ON
ⓑ OFF

HANDLEBAR SWITCH (RIGHT)

Engine stop switch and throttle switch

1. Disconnect:
   - Handlebar switch (right) coupler ①
2. Connect:
   - Pocket tester
3. Check:
   - Engine stop switch continuity
     Faulty → Replace the handlebar switch (right).

Switch position	Continuity
RUN (pulled out)	No
OFF (pushed in)	Yes

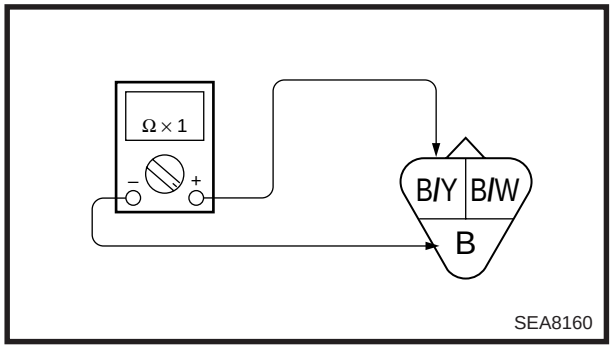

4. Check:
   - Throttle switch continuity
     Faulty → Replace the handlebar switch (right).

Throttle switch position	Continuity
Throttle lever is operated.	**Yes**
Throttle lever is not operated.	**No**

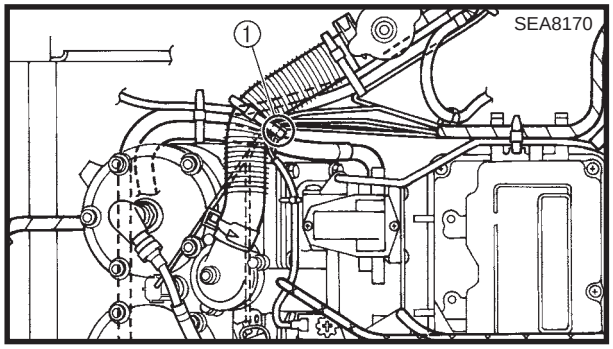

CARBURETOR SWITCH

1. Disconnect:
   - Carburetor switch lead ①
2. Connect:
   - Pocket tester
3. Check:
   - Carburetor switch continuity
     Faulty → Replace.

Carburetor switch position	Continuity
Throttle lever is operated.	**No**
Throttle lever is not operated.	**Yes**

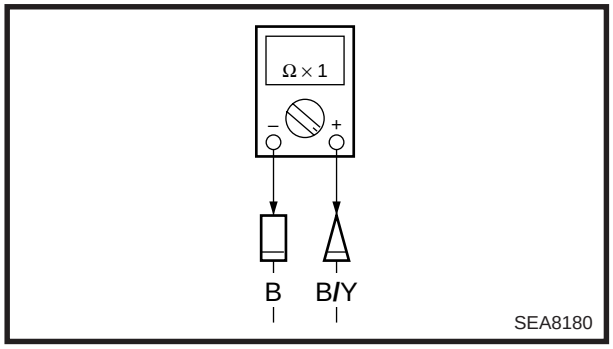

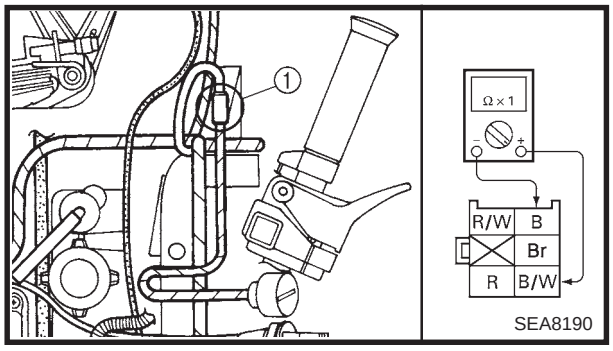

MAIN SWITCH

1. Disconnect:
   - Main switch coupler ①
2. Connect:
   - Pocket tester
3. Check:
   - Main switch continuity
     Faulty → Replace.

Switch position	Continuity
OFF	**Yes**
ON	**No**

Switch position	Color code				
	Br	**R**	**R/W**	**B**	**B/W**
OFF				○—○	
ON	○—○				
START	○—○	○—○			

○—○ Continuity

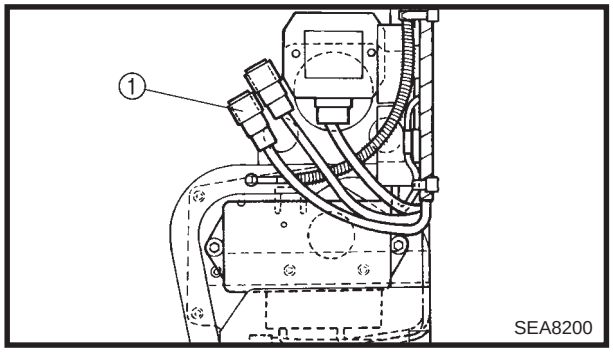

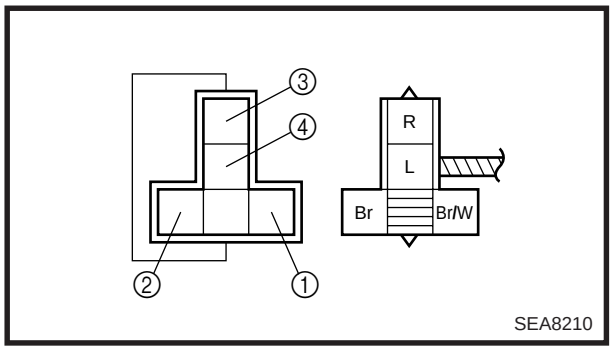

LOAD CONTROL RELAY

1. Inspect:
   - Load control relay (with the white coupler) ①

Inspection steps:

- Disconnect the load control relay from the coupler.
- Connect the pocket tester (Ω × 1) and battery (12 V) to the load control relay terminals as shown.

Positive battery terminal → Brown ①
Negative battery terminal → Brown/White ②
Positive tester probe → Red ③
Negative tester probe → Blue ④

- If load control relay does not have continuity between the red and blue terminals, replace it.

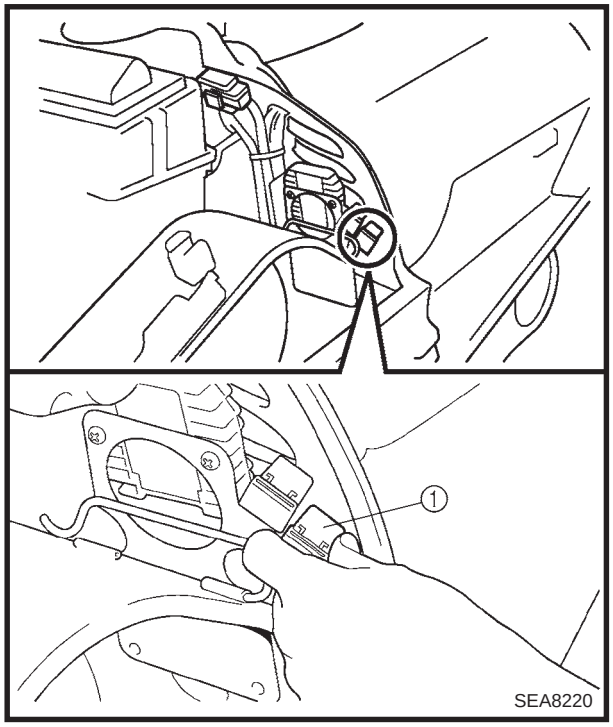

EMERGENCY ENGINE STARTING (SX600/MM600)

If a short circuit occurred in the lighting system, the signal system, or the meter system, the engine can be started in an emergency by cutting off the load control relay.

1. Disconnect:
   - Load control relay (with the white coupler) ①
2. Start the engine.

ELECTRICAL STARTING SYSTEM
CIRCUIT DIAGRAM (VX600ER/VT600)

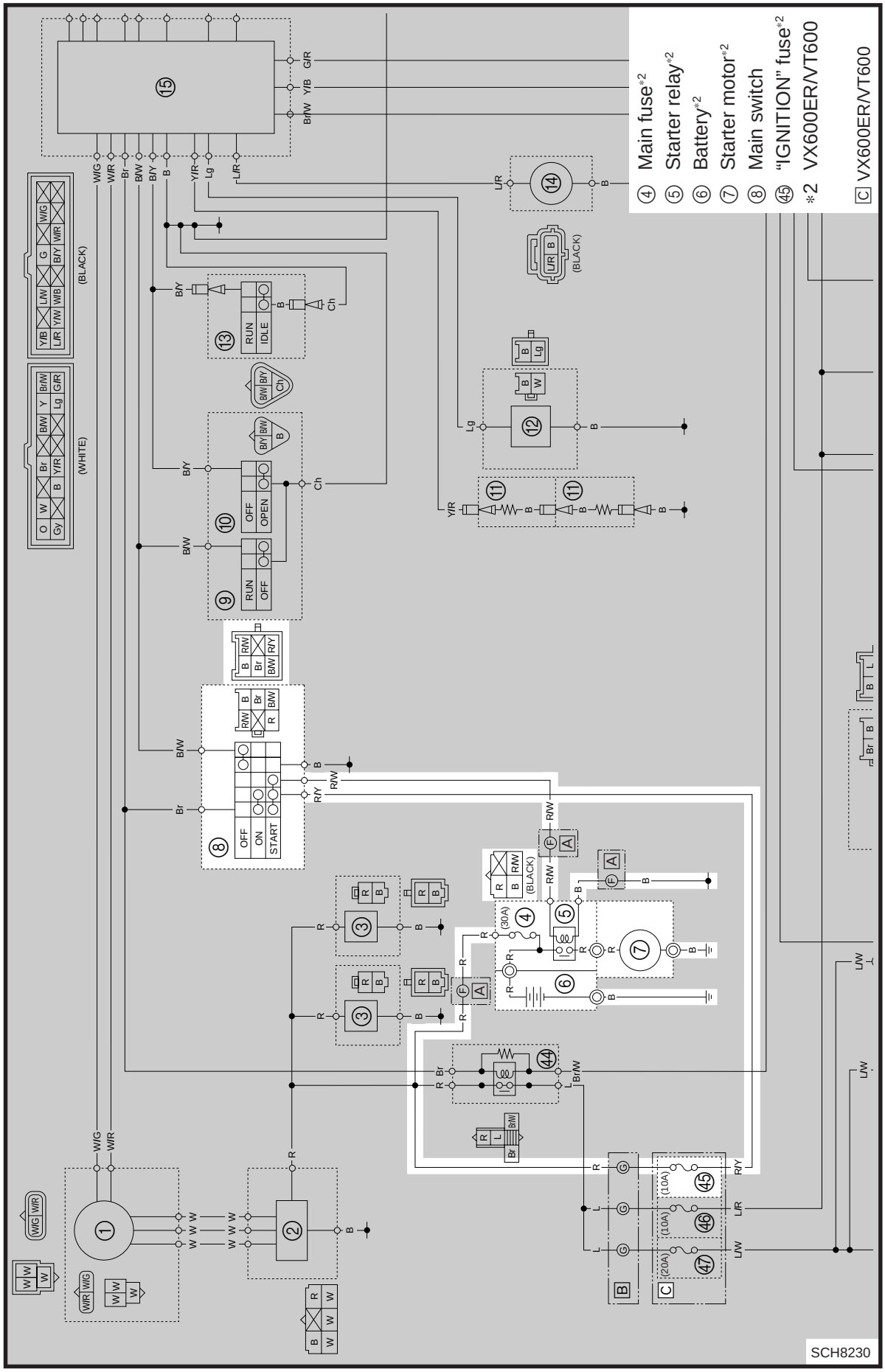

TROUBLESHOOTING (VX600ER/VT600)

STARTER MOTOR DOES NOT OPERATE.

WARNING

Before starter motor operation, push the engine stop switch to "OFF".

1. Connect:
   - Starter relay terminals (battery side and starter motor side)

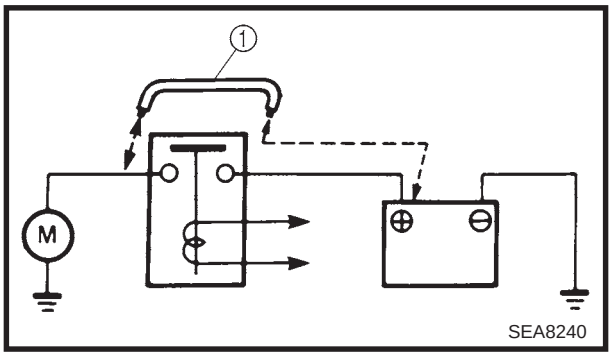

① Jumper lead

2. Check:
   - Starter motor operation

OK ↓

3. Disconnect:
   - Starter relay coupler
4. Connect:
   - Starter relay coupler terminals

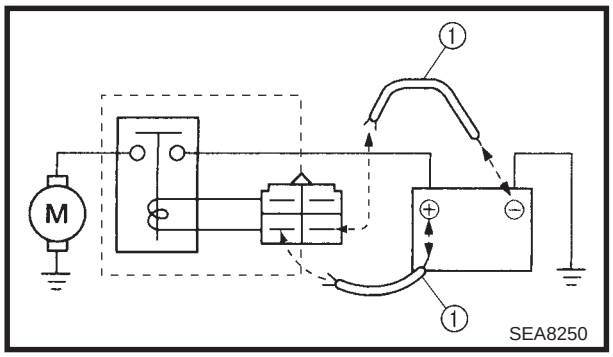

① Jumper lead

5. Check:
   - Starter motor operation

OK ↓

*

NO →

Check the battery and connectors.
Refer to "BATTERY INSPECTION" in CHAPTER 2.

OK ↓ NO →

Charge and/or replace the battery.
Refer to "BATTERY CHARGING" in CHAPTER 2.

Repair or replace the starter motor.

WARNING

A wire for the jumper lead ① must have the equivalent capacity as that of the battery lead or more, otherwise it may cause the jumper lead to be burned.
This check is likely to produce sparks, so be sure that no flammable gas or fluid is in the vicinity.

NO →

Replace the starter relay.

*

Check the main fuse and “IGNITION” fuse.
Refer to “FUSE INSPECTION” in CHAPTER 2.

FAULTY → Replace the main fuse and/or “IGNITION” fuse.

OK

Check the main switch.

FAULTY → Replace the main switch.

OK

Correct the connection.

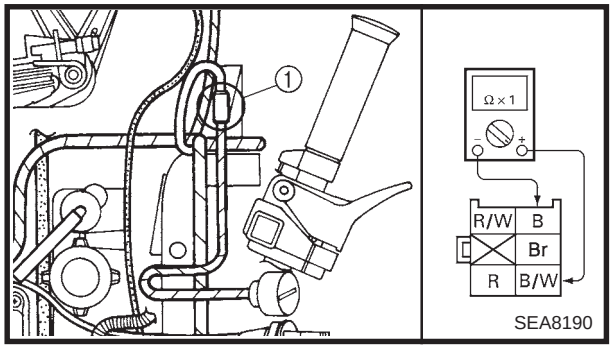

MAIN SWITCH

1. Disconnect:
   - Main switch coupler ①
2. Connect:
   - Pocket tester
3. Check:
   - Main switch continuity
     Faulty → Replace.

Switch position	Continuity
OFF	Yes
ON	No

Switch position	Color code				
	Br	R	R/W	B	B/W
OFF				○—○	
ON	○—○				
START	○—○		○		

○—○ Continuity

STARTER MOTOR (VX600ER/VT600)

A: 7 Nm (0.7 m · kg, 5.1 ft · lb)

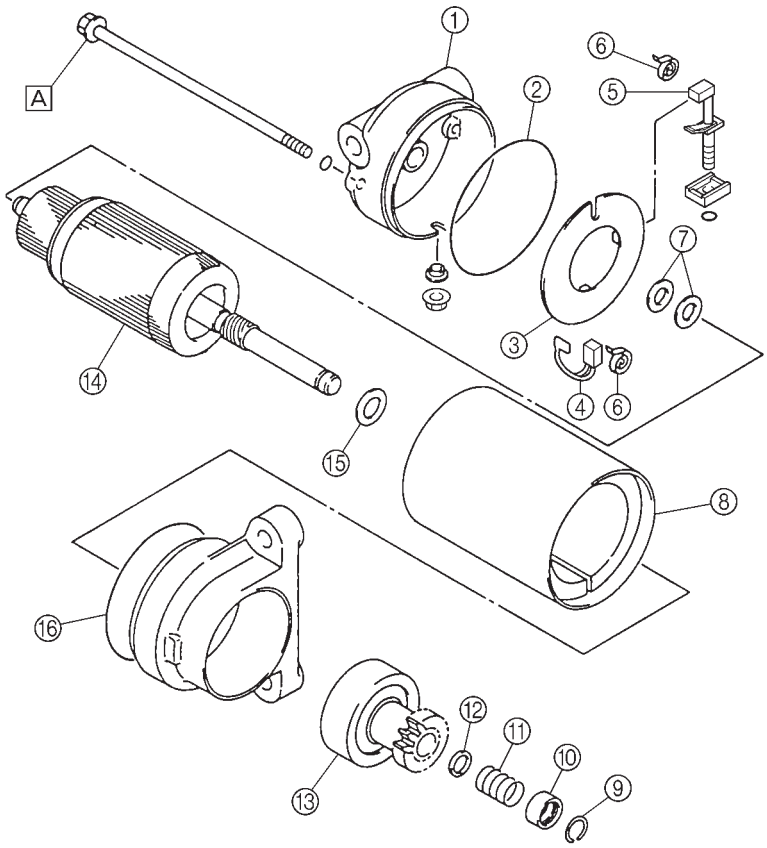

SEA8260

Order	Job name/Part name	Q'ty	Remarks
	Starter motor disassembly		Remove the parts in the order listed below.
	Starter motor removal		Refer to "ENGINE REMOVAL" in CHAPTER 5.
①	Rear bracket	1	
②	O-ring	1	
③	Brush plate	1	
④	Brush 1	1	
⑤	Brush 2	1	
⑥	Brush spring	2	
⑦	Washer	2	
⑧	Yoke	1	
⑨	Clip	1	
⑩	Pinion stopper	1	
⑪	Return spring	1	
⑫	Washer	1	
⑬	Pinion gear	1	
⑭	Armature coil	1	
⑮	Washer	1	
⑯	Front bracket	1	
			For assembly, reverse the disassembly procedure.

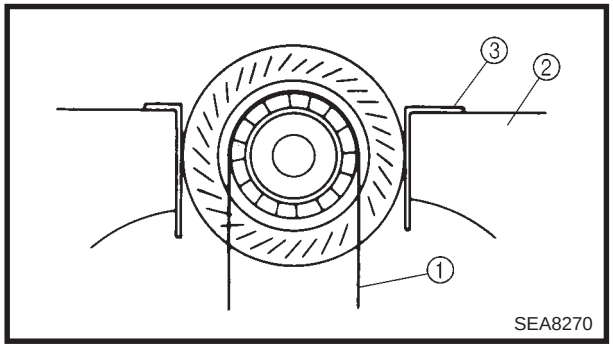

Inspection

1. Inspect:
   - Commutator (outer surface)
     Dirty → Clean with #600 grit sandpaper ①.
     Hold the armature in a vise ② and copper or aluminium plate ③.

CAUTION:

Lightly grip the armature with a vise.

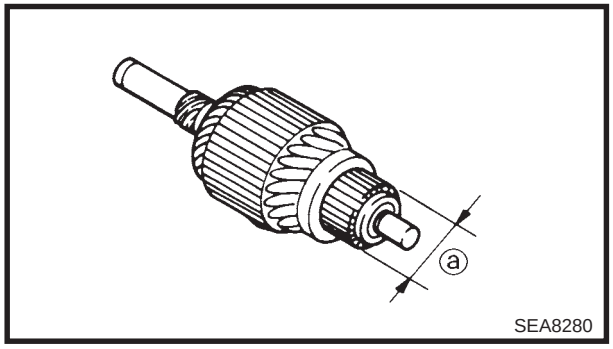

2. Measure:
   - Commutator diameter ⓐ
     Measure the diameter ⓐ of the commutator at points where the brush comes in contact.
     Out of specification → Replace the starter motor.

Commutator diameter wear limit:
27 mm (1.06 in)

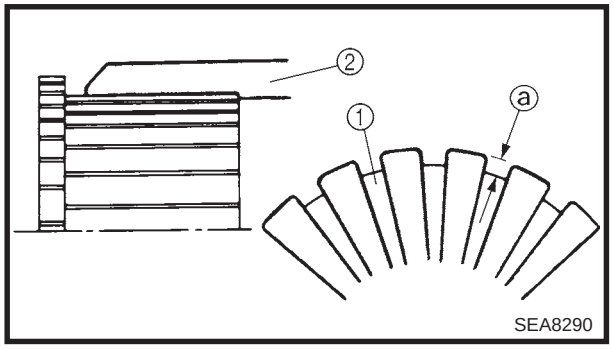

3. Measure:
   - Mica undercut (insulation depth) ⓐ
     (between commutator segments)
     Out of specification → Scrape mica ① to proper limits.
     Use a hacksaw blade ② that is ground to fit.

Mica undercut:
0.6 mm (0.024 in)

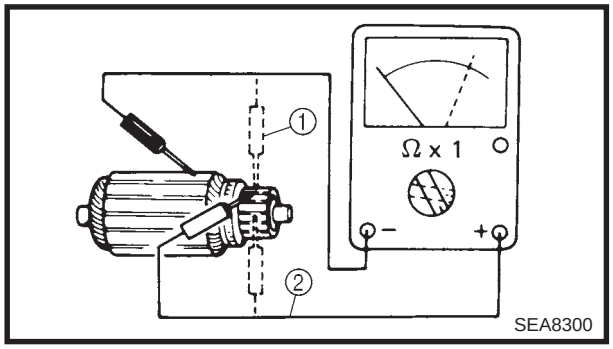

4. Measure:
   - Armature coil resistance (insulation/continuity)
     Defect(s) → Replace the starter motor.

Inspecting steps:
- Connect the pocket tester for the continuity check ① and the insulation check ②.
- Measure the armature coil resistances.

Armature coil resistance:
Continuity check:
0.014 ~ 0.018 Ω at 20°C (68°F)
Insulation check:
More than 100 kΩ at 20°C (68°F)

- If the resistance is incorrect, replace the starter motor.

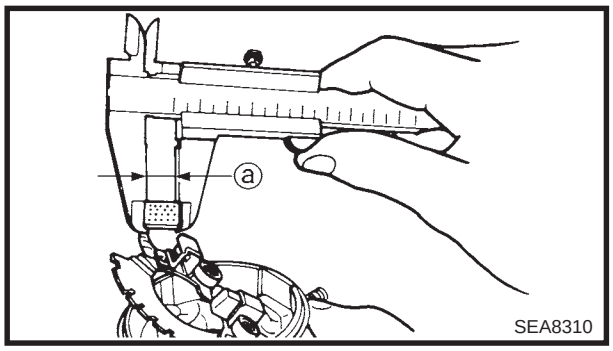

5. Measure:
   - Brush length ⓐ
     Out of specification → Replace the starter motor.

Brush length wear limit:
8.5 mm (0.33 in)

6. Measure:
   - Brush spring pressure
     Fatigue/out of specification → Replace as a set.

Brush spring pressure:
6.38 ~ 9.32 N
(650 ~ 950 g, 22.9 ~ 33.5 oz)

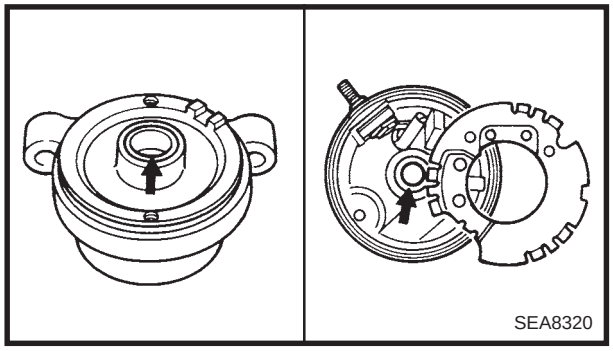

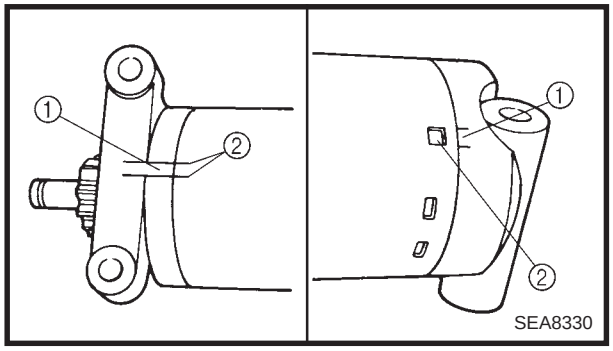

Assembly

Reverse the “Disassembly” procedure.

Note the following points.

1. Before installing the front bracket and rear bracket, apply bearing grease to the bearings of the front bracket and rear bracket.
2. Make sure the front bracket and rear bracket cover are fitted with O-rings.
3. When installing the rear bracket assembly, take care not to scratch the brushes.
4. Install:
   - Securing bolts (starter motor)

NOTE:

Align the match marks ① on the bracket with the match marks ② on the yoke.

CHARGING SYSTEM
CIRCUIT DIAGRAM (VX600ER/VT600)

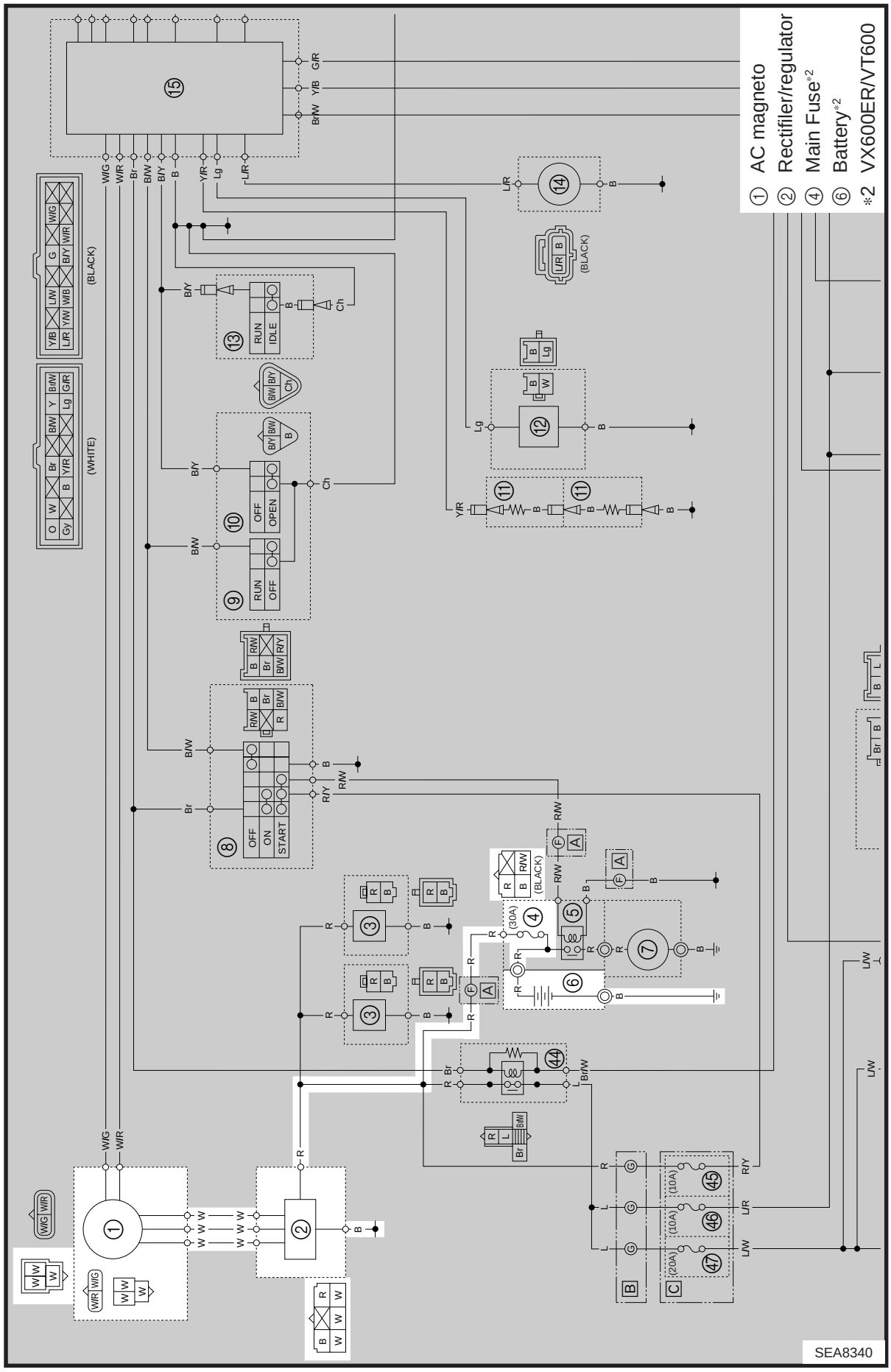

TROUBLESHOOTING (VX600ER/VT600)

BATTERY IS NOT CHARGED.

1. Connect:
   - Pocket tester
     (to the battery terminals)
2. Measure:
   - Battery voltage
   - Fluid gravity

Battery voltage:
more than 12 V at 20°C (68°F)

OK

OUT OF SPECIFICATIONS

- Check the battery.
  Refer to “BATTERY INSPECTION” in CHAPTER 2.
- Replace and/or charge the battery.
  Refer to “BATTERY CHARGING” in CHAPTER 2.

3. Start the engine and accelerate to 5,000 r/min.
4. Measure:
   - Charging voltage

Charging voltage:
14 V/5,000 r/min

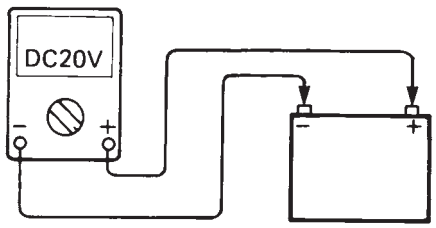

SEA8350

OUT OF SPECIFICATION

- Check the main fuse.
  Refer to “FUSE INSPECTION” in CHAPTER 2.
- Check the startor coil.

OK

FAULTY

Replace the main fuse and/or the startor coil assembly.

Replace the rectifier/regulator.

⚠ WARNING

Be sure the V-belt is removed.

CAUTION:

Never disconnect battery cables while generator is operating, otherwise, the rectifier/regulator will be damaged.

OK

Correct connector.

BATTERY

Inspection

1. Inspect:
   - Battery fluid level
     Refer to “BATTERY INSPECTION” in CHAPTER 2.
2. Check:
   - Specific gravity
     Less than 1.280 → Recharge battery.

Battery Storage

The battery should be stored if the vehicle is not going to be used for a long period.

1. Remove:
   - Battery

⚠ WARNING

When removing the battery, disconnect the negative lead first.

Battery storage and maintenance tips:

- Recharge the battery periodically.
- Store the battery in a cool, dry place.
- Recharge the battery before reinstalling.

Battery	
Electrolyte	**Specific gravity: 1.280 at 20°C (68°F)**
Initial charging rate	**2.0 Amp for 10 hours (new battery)**
Recharging rate	**10 hours (or until specific gravity reaches 1.280)**
Refill fluid	**Distilled water (to maximum level line)**
Refill period	**Check once per month (or more often as required)**

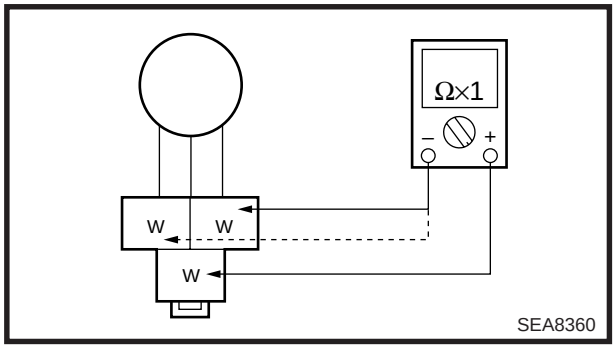

STATOR COIL

1. Measure:
   - Stator coil resistance
     Out of specification → Replace startor coil assembly.

Stator coil resistance:
(White – White)
0.36 ~ 0.44 Ω at 20°C (68°F)

LIGHTING SYSTEM
CIRCUIT DIAGRAM

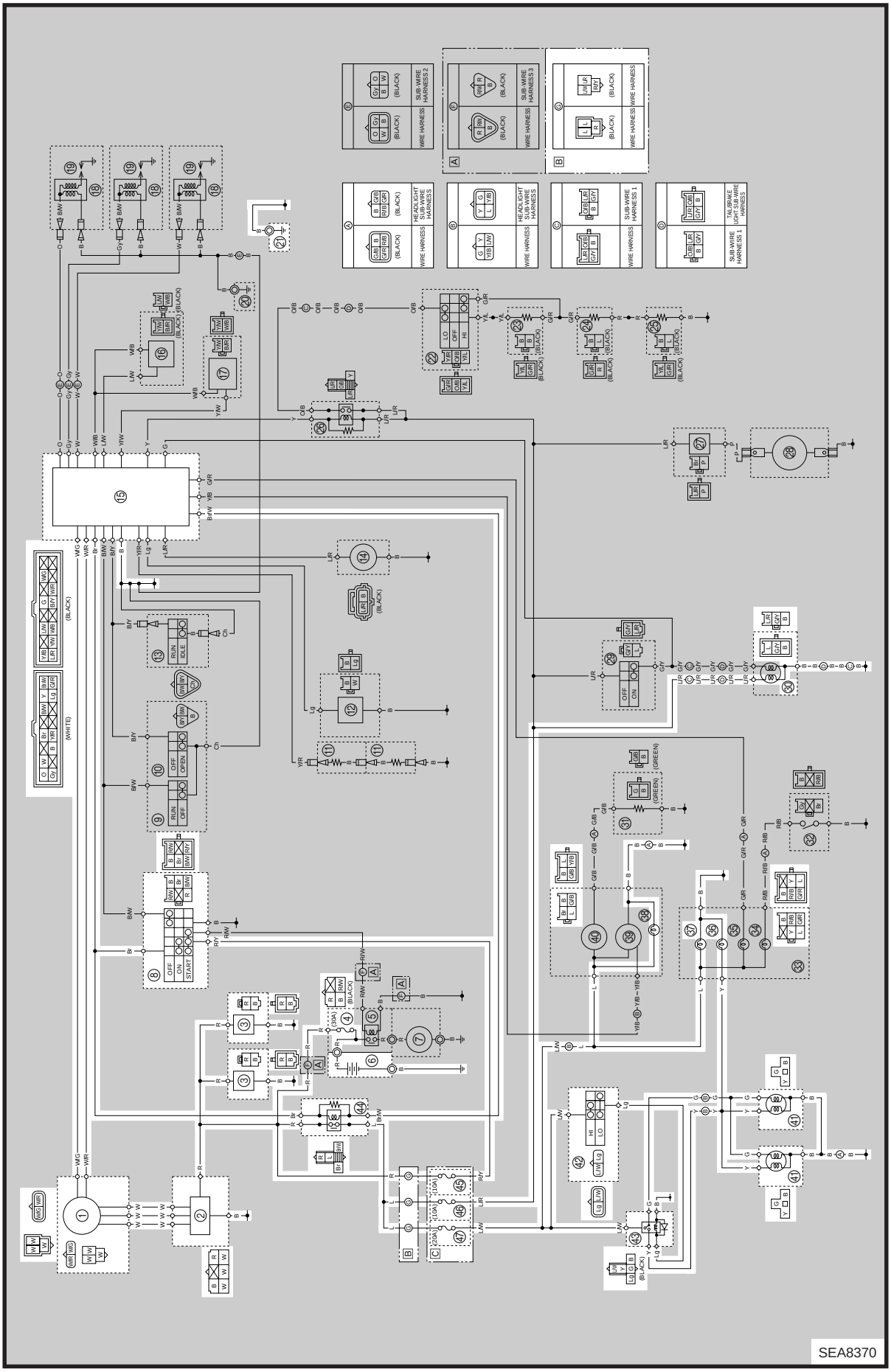

LIGHTING SYSTEM

CIRCUIT DIAGRAM

① AC magneto
② Rectifier/regulator
③ Condenser*1
④ Main fuse*2
⑥ Battery*2
⑧ Main switch
⑮ CDI unit
㉑ Frame ground
㉚ Tail/brake light
㊱ High beam indicator light
㊲ Speedometer light
㊳ Tachometer light
㊶ Headlight
㊷ Headlight beam switch
㊸ Headlight relay (with the black coupler)
㊹ Load control relay (with the white coupler)
㊺ “IGNITION” fuse*2
㊻ “TAIL” fuse*2
㊼ “HEAD” fuse*2
*1 SX600/MM600
*2 VX600ER/VT600

B SX600/MM600
C VX600ER/VT600

TROUBLESHOOTING

HEADLIGHT AND/OR METER LIGHT DO NOT COME ON.

Check the bulb(s).

OK — NO CONTINUITY → Replace the bulb(s).

For VX600ER/VT600:
Check the main fuse, “IGNITION” fuse and “HEAD” fuse.
Refer to “FUSE INSPECTION” in CHAPTER 2.

OK — FAULTY → Replace the main fuse, “IGNITION” fuse and/or “HEAD” fuse.

For VX600ER/VT600:
Check the battery.
Refer to “BATTERY INSPECTION” in CHAPTER 2.

OK — OUT OF SPECIFICATION → Replace and/or charge the battery.
Refer to “BATTERY CHARGING” in CHAPTER 2.

For SX600/MM600:
Check the condenser.
Refer to “IGNITION SYSTEM”.

OK — OUT OF SPECIFICATION → Replace the condenser.

Check the stator coil and pickup coil.
Refer to “IGNITION SYSTEM”.

OK — OUT OF SPECIFICATION → Replace the stator coil assembly.

Check the main switch.
Refer to “IGNITION SYSTEM”.

OK — FAULTY → Replace the main switch.

Check the headlight beam switch.

OK — FAULTY → Replace the headlight beam switch.

Check the headlight relay.

OK — FAULTY → Replace the headlight relay.

Check the load control relay.
Refer to “IGNITION SYSTEM”.

OK — FAULTY → Replace the load control relay.

Correct the connection and/or
replace the rectifier/regulator
and/or CDI unit.

TAIL LIGHT DOES NOT COME ON.

Check the bulb(s).

OK ⇩ NO CONTINUITY ⇨ Replace the bulb(s).

For VX600ER/VT600:
Check the main fuse,
“IGNITION” fuse and “TAIL” fuse.
Refer to “FUSE INSPECTION” in CHAPTER 2.

OK ⇩ FAULTY ⇨ Replace the main fuse, “IGNITION” fuse and/or “TAIL” fuse.

For VX600ER/VT600:
Check the battery.
Refer to “BATTERY INSPECTION” in CHAPTER 2.

OK ⇩ OUT OF SPECIFICATION ⇨ Replace and/or charge the battery.
Refer to “BATTERY CHARGING” in CHAPTER 2.

For SX600/MM600:
Check the condenser.
Refer to “IGNITION SYSTEM”.

OK ⇩ OUT OF SPECIFICATION ⇨ Replace the condenser.

Check the stator coil and pickup coil.
Refer to “IGNITION SYSTEM”.

OK ⇩ OUT OF SPECIFICATION ⇨ Replace the stator coil assembly.

Check the main switch.
Refer to “IGNITION SYSTEM”.

OK ⇩ FAULTY ⇨ Replace the main switch.

Check the load control relay.
Refer to “IGNITION SYSTEM”.

OK ⇩ FAULTY ⇨ Replace the load control relay.

Correct the connection and/or
replace the rectifier/regulator
and/or CDI unit.

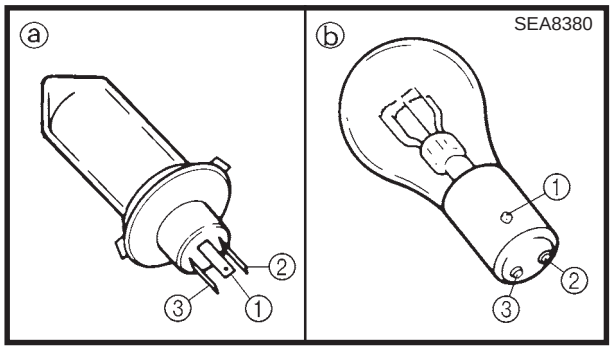

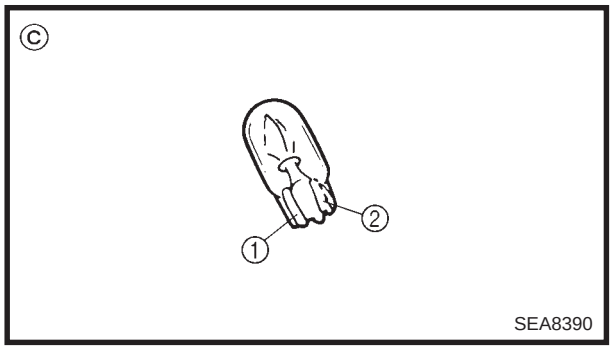

BULB(S)

1. Remove:
   - Headlight bulb ⓐ
   - Tail/brake light bulb ⓑ
   - Meter light bulb ⓒ
2. Connect:
   - Pocket tester
     (to the bulb terminals)

⚠ WARNING

Keep flammable products and your hands away from the bulb while it is on; it will be hot. Do not touch the bulb until it cools down.

3. Check:
   - Bulb(s)

Terminal	Continuity
① – ②	Yes
① – ③	Yes

HEADLIGHT BEAM SWITCH

1. Disconnect:
   - Headlight beam switch coupler
2. Connect:
   - Pocket tester
     (to the headlight beam switch coupler)

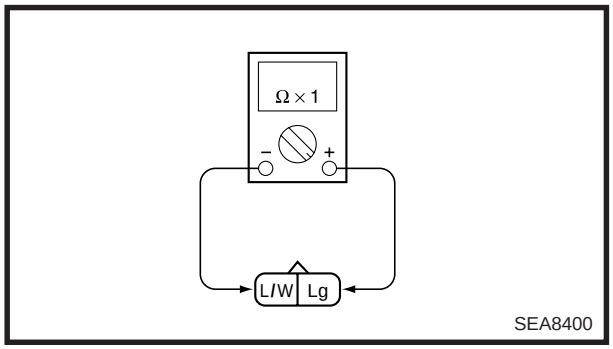

3. Check:
   - Headlight beam switch continuity
     Faulty → Replace.

Switch position	Continuity
HI	Yes
LO	No

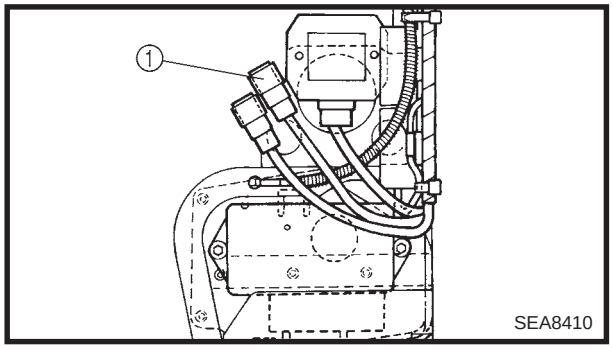

HEADLIGHT RELAY

1. Inspect:
   - Headlight relay (with the black coupler) ①

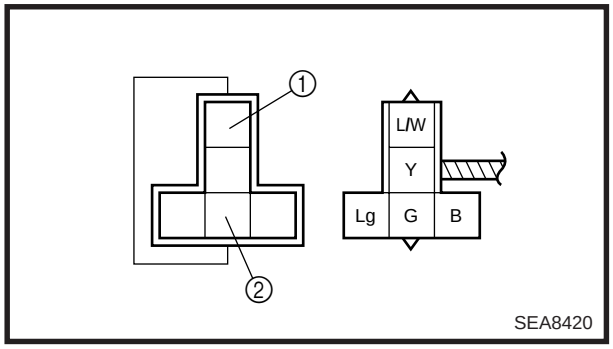

Inspection steps:

- Disconnect the headlight relay from the coupler.
- Connect the pocket tester (Ω × 1) to the headlight relay terminals as shown.

Positive tester probe → Blue/White ①
Negative tester probe → Green ②

- If headlight relay does not have continuity between the blue/white and green terminals, replace it.

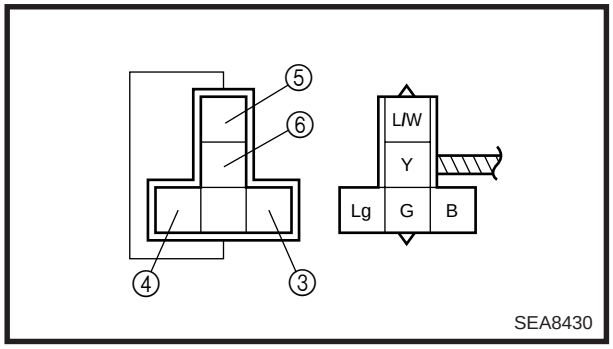

- Connect the pocket tester (Ω × 1) and battery (12V) to the headlight relay terminals as shown.

Positive battery terminal → Light green ③
Negative battery terminal → Black ④
Positive tester probe → Blue/White ⑤
Negative tester probe → Yellow ⑥

- If headlight relay does not have continuity between the blue/white and yellow terminals, replace it.

SIGNAL SYSTEM
CIRCUIT DIAGRAM

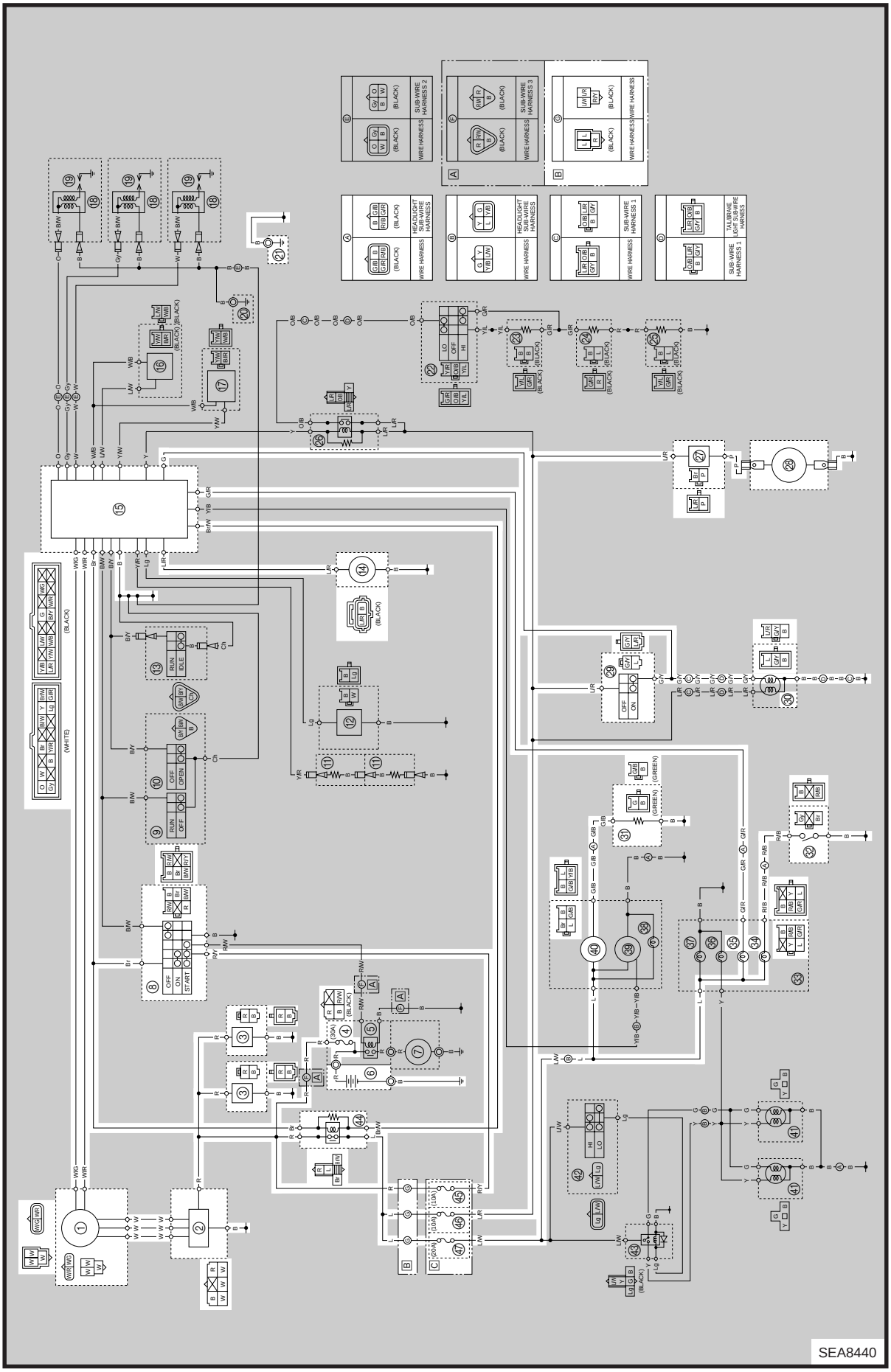

SIGNAL SYSTEM

CIRCUIT DIAGRAM

① AC Magneto
② Rectifier/regulator
③ Condenser*1
④ Main fuse*2
⑥ Battery*2
⑧ Main switch
⑭ Water temperature sensor
⑮ CDI unit
㉑ Frame ground
㉗ DC back buzzer*2
㉘ Gear position switch*2
㉙ Brake light switch
㉚ Tail/brake light
㉛ Fuel sender
㉜ Oil level switch
㉞ Oil level indicator light
㉟ Water temperature indicator light
㊵ Fuel meter
㊹ Load control relay (with the white coupler)
㊺ “IGNITION” fuse*2
㊻ “TAIL” fuse*2
㊼ “HEAD” fuse*2
*1 SX600/MM600
*2 VX600ER/VT600

B SX600/MM600
C VX600ER/VT600

TROUBLESHOOTING

BRAKE LIGHT DOES NOT COME ON.

Check the tail/brake light bulb.
Refer to “LIGHTING SYSTEM”.

OK ⇩ NO CONTINUITY ⇨ Replace the bulb.

For VX600ER/VT600:
Check the main fuse,
“IGNITION” fuse and “TAIL” fuse.
Refer to “FUSE INSPECTION” in CHAPTER 2.

OK ⇩ FAULTY ⇨ Replace the main fuse, “IGNITION” fuse and/or “TAIL” fuse.

For VX600ER/VT600:
Check the battery.
Refer to “BATTERY INSPECTION” in CHAPTER 2.

OK ⇩ OUT OF SPECIFICATION ⇨ Replace and/or charge the battery.
Refer to “BATTERY CHARGING” in CHAPTER 2.

For SX600/MM600:
Check the condenser.
Refer to “IGNITION SYSTEM”.

OK ⇩ OUT OF SPECIFICATION ⇨ Replace the condenser.

Check the stator coil and pickup coil.
Refer to “IGNITION SYSTEM”.

OK ⇩ OUT OF SPECIFICATION ⇨ Replace the stator coil assembly.

Check the main switch.
Refer to “IGNITION SYSTEM”.

OK ⇩ FAULTY ⇨ Replace the main switch.

Check the brake light switch.

OK ⇩ FAULTY ⇨ Replace the brake light switch.

Check the load control relay.
Refer to “IGNITION SYSTEM”.

OK ⇩ FAULTY ⇨ Replace the load control relay.

Correct the connection and/or
replace the rectifier/regulator
and/or CDI unit.

WATER TEMPERATURE AND/OR OIL LEVEL INDICATOR LIGHTS DO NOT COME ON.

Check the water temperature and/or oil level indicator light bulb(s).
Refer to “LIGHTING SYSTEM”.

OK ⇩ NO CONTINUITY ⇨ Replace the bulb(s).

For VX600ER/VT600:
Check the main fuse, “IGNITION” fuse and “HEAD” fuse.
Refer to “FUSE INSPECTION” in CHAPTER 2.

OK ⇩ FAULTY ⇨ Replace the main fuse, “IGNITION” fuse and/or “HEAD” fuse.

For VX600ER/VT600:
Check the battery.
Refer to “BATTERY INSPECTION” in CHAPTER 2.

OK ⇩ OUT OF SPECIFICATION ⇨ Replace and/or charge the battery.
Refer to “BATTERY CHARGING” in CHAPTER 2.

For SX600/MM600:
Check the condenser.
Refer to “IGNITION SYSTEM”.

OK ⇩ OUT OF SPECIFICATION ⇨ Replace the condenser.

Check the stator coil and pickup coil.
Refer to “IGNITION SYSTEM”.

OK ⇩ OUT OF SPECIFICATION ⇨ Replace the stator coil assembly.

Check the main switch.
Refer to “IGNITION SYSTEM”.

OK ⇩ FAULTY ⇨ Replace the main switch.

Check the water temperature sensor or oil level switch.

OK ⇩ FAULTY ⇨ Replace the water temperature sensor or oil level switch.

Check the load control relay.
Refer to “IGNITION SYSTEM”.

OK ⇩ FAULTY ⇨ Replace the load control relay.

Correct the connection and/or replace the rectifier/regulator and/or CDI unit.

NOTE:
The water temperature indicator light come on for a few seconds after the engine starts. If the light does not come on, check the indicator light circuit and bulb.

FUEL METER DOES NOT OPERATE.

For VX600ER/VT600:
Check the main fuse,
“IGNITION” fuse and “HEAD” fuse.
Refer to “FUSE INSPECTION” in CHAPTER 2.

OK ⇩ FAULTY ⇨ Replace the main fuse, “IGNITION” fuse and/or “HEAD” fuse.

For VX600ER/VT600:
Check the battery.
Refer to “BATTERY INSPECTION” in CHAPTER 2.

OK ⇩ OUT OF SPECIFICATION ⇨ Replace and/or charge the battery.
Refer to “BATTERY CHARGING” in CHAPTER 2.

For SX600/MM600:
Check the condenser.
Refer to “IGNITION SYSTEM”.

OK ⇩ OUT OF SPECIFICATION ⇨ Replace the condenser.

Check the stator coil and pickup coil.
Refer to “IGNITION SYSTEM”.

OK ⇩ OUT OF SPECIFICATION ⇨ Replace the stator coil assembly.

Check the main switch.
Refer to “IGNITION SYSTEM”.

OK ⇩ FAULTY ⇨ Replace the main switch.

Check the fuel sender.

OK ⇩ FAULTY ⇨ Replace the fuel sender.

Check the load control relay.
Refer to “IGNITION SYSTEM”.

OK ⇩ FAULTY ⇨ Replace the load control relay.

Check the fuel meter.

OK ⇩ DOES NOT MOVE ⇨ Replace the fuel meter.

Correct the connection and/or
replace the rectifier/regulator
and/or CDI unit.

BACK BUZZER DOES NOT SOUND. (VX600ER/VT600)

Check the main fuse,
"IGNITION" fuse and "TAIL" fuse.
Refer to "FUSE INSPECTION" in CHAPTER 2.

OK ⇩ FAULTY ⇨ Replace the main fuse, "IGNITION" fuse and/or "TAIL" fuse.

Check the battery.
Refer to "BATTERY INSPECTION" in CHAPTER 2.

OK ⇩ OUT OF SPECIFICATION ⇨ Replace and/or charge the battery.
Refer to "BATTERY CHARGING" in CHAPTER 2.

Check the stator coil and pickup coil.
Refer to "IGNITION SYSTEM".

OK ⇩ OUT OF SPECIFICATION ⇨ Replace the stator coil assembly.

Check the main switch.
Refer to "IGNITION SYSTEM".

OK ⇩ FAULTY ⇨ Replace the main switch.

Check the gear position switch.

OK ⇩ FAULTY ⇨ Replace the gear position switch.

Check the load control relay.
Refer to "IGNITION SYSTEM".

OK ⇩ FAULTY ⇨ Replace the load control relay.

Check the DC back buzzer.

OK ⇩ DOES NOT SOUND ⇨ Replace the DC back buzzer.

Correct the connection and/or
replace the rectifier/regulator
and/or CDI unit.

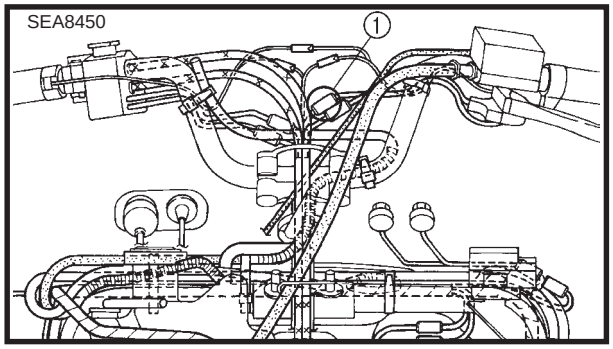

BRAKE LIGHT SWITCH

1. Disconnect:
   - Brake light switch coupler ①
2. Connect:
   - Pocket tester
     (to the brake light switch coupler)
3. Check:
   - Brake light switch continuity
     Faulty → Replace.

Switch position	Continuity
Brake lever operates	**Yes**
Brake lever does not operate	**No**

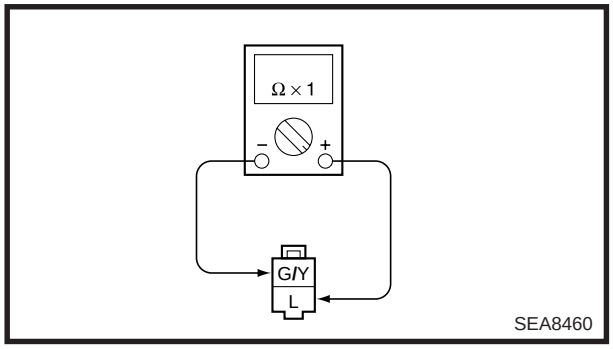

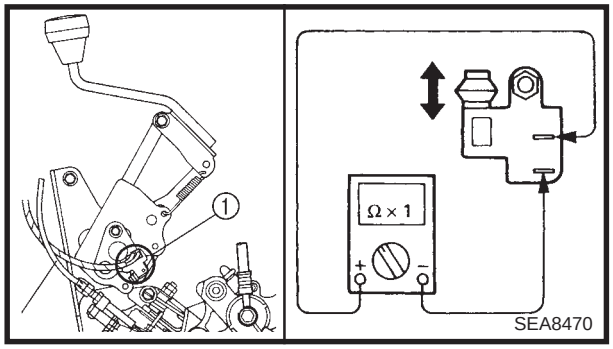

GEAR POSITION SWITCH (VX600ER/VT600)

1. Check:
   - Gear position switch ① continuity
     Faulty → Replace.

Shift lever position	Continuity
FORWARD	**No**
REVERSE	**Yes**

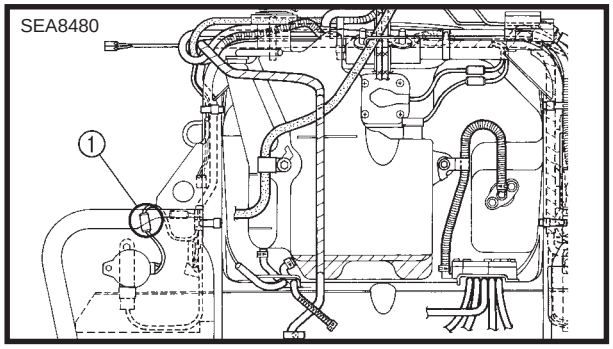

DC BACK BUZZER (VX600ER/VT600)

1. Disconnect:
   - DC back buzzer coupler ①

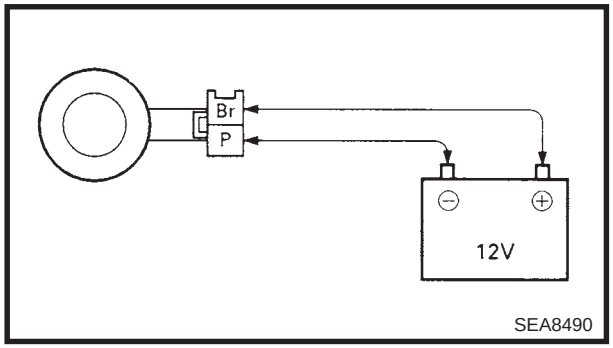

2. Connect:
   - Battery
3. Check:
   - DC back buzzer
     Does not sound → Replace.

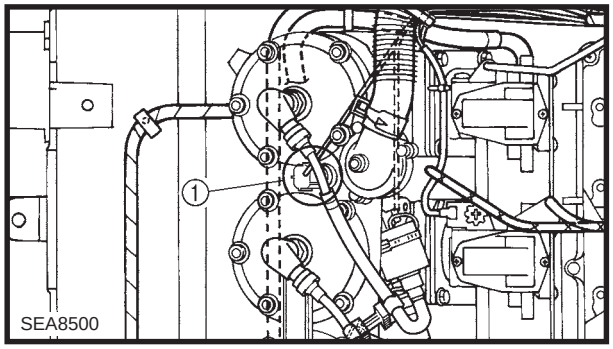

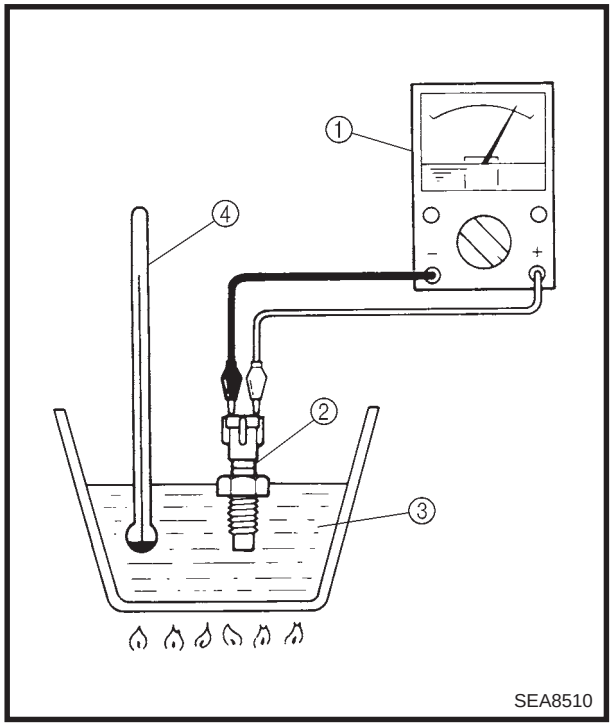

WATER TEMPERATURE SENSOR

1. Disconnect the water temperature sensor coupler ① and remove the water temperature sensor.

CAUTION:

Handle the water temperature sensor with special care. Never subject it to shock or allow it to be dropped. If it is dropped, it must be replaced.

2. Connect:
   - Pocket tester ①
     (to the water temperature sensor)

NOTE:

Set the tester selector to the "Ω × 1" position.

3. Immerse the water temperature sensor ② in coolant ③ and check the water temperature sensor operation.

Water temperature sensor resistance:
5.2 ~ 6.4 kΩ at 0°C (34°F)
0.300 ~ 0.364 kΩ at 80°C (176°F)
0.170 ~ 0.208 kΩ at 100°C (212°F)

④ Temperature gauge

CAUTION:

Never heat the coolant to a temperature of 120°C (248.5°F) or more.

4. If the water temperature sensor operation is defective, replace it.
5. Install the water temperature sensor and connect the water temperature sensor lead.

Water temperature sensor:
23 Nm (2.3 m · kg, 17 ft · lb)

CAUTION:

Do not overtighten the water temperature sensor.

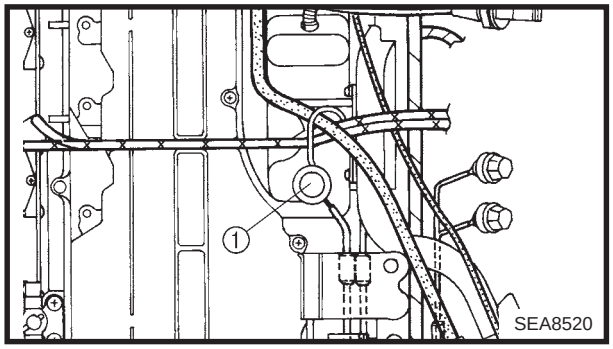

OIL LEVEL SWITCH

1. Remove:
   - Intake silencer
     Refer to “FUEL PUMP” in CHAPTER 7.
   - Oil level switch ①

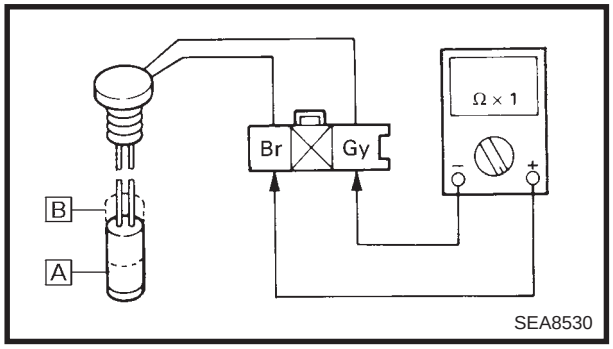

2. Connect:
   - Pocket tester
     (to the oil level switch coupler)
3. Check:
   - Oil level switch continuity
     Faulty → Replace.

Switch position		Good condition	Bad condition		
A	Down position	○	×	×	○
B	Up position	×	○	×	○

○ : Continuity × : No continuity

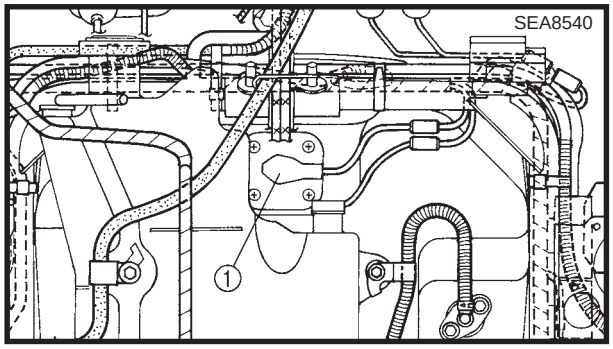

FUEL SENDER

1. Remove:
   - Intake silencer
     Refer to “FUEL PUMP” in CHAPTER 7.
   - Fuel sender ①
     (from the fuel tank)
2. Connect:
   - Pocket tester
     (to the fuel sender coupler)

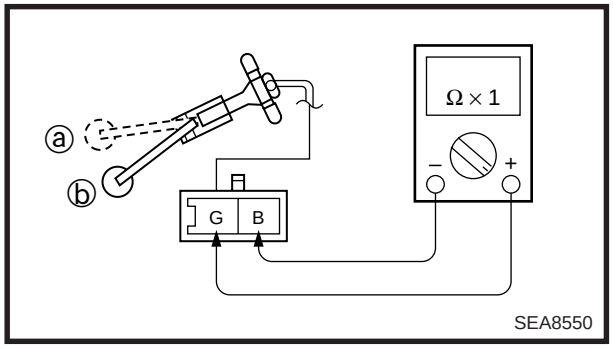

3. Measure:
   - Fuel sender resistance (full ⓐ)
   - Fuel sender resistance (empty ⓑ)
     Out of specification → Replace.

Fuel sender resistance (full):
4 ~ 10 Ω at 20°C (68°F)
Fuel sender resistance (empty):
90 ~ 100 Ω at 20°C (68°F)

GRIP WARMER SYSTEM

CIRCUIT DIAGRAM

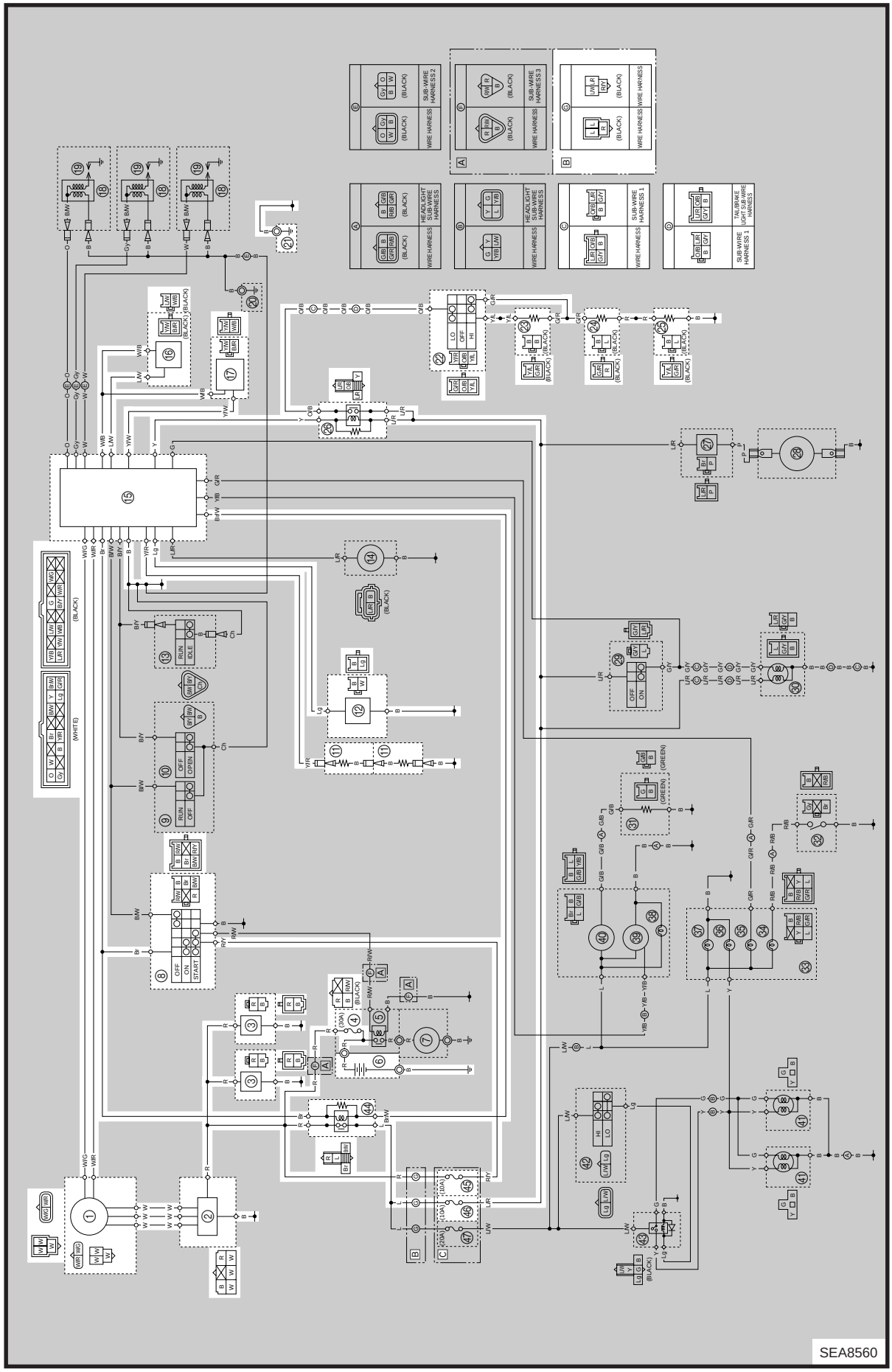

GRIP WARMER SYSTEM

CIRCUIT DIAGRAM

① AC magneto
② Rectifier/regulator
③ Condenser*1
④ Main fuse*2
⑥ Battery*2
⑧ Main switch
⑪ Grip warmer
⑫ Thumb warmer
⑮ CDI unit
⑯ Variable resistor (thumb warmer)
⑰ Variable resistor (grip warmer)
㉑ Frame ground
㉒ Passenger grip warmer switch*3
㉓ Resistor*3
㉔ Passenger grip warmer (left)*3
㉕ Passenger grip warmer (right)*3
㉖ Passenger grip warmer relay*3
㊹ Load control relay
(with the white coupler)
㊺ "IGNITION" fuse*2
㊻ "TAIL" fuse*2
*1 SX600/MM600
*2 VX600ER/VT600
*3 VT600

B SX600/MM600
C VX600ER/VT600

TROUBLESHOOTING

GRIP WARMER AND THUMB WARMER DO NOT OPERATE.

For VX600ER/VT600:
Check the main fuse and “IGNITION” fuse.
Refer to “FUSE INSPECTION” in CHAPTER 2.

OK ⇩ FAULTY ⇨ Replace the main fuse and/or “IGNITION” fuse.

For VX600ER/VT600:
Check the battery.
Refer to “BATTERY INSPECTION” in CHAPTER 2.

OK ⇩ OUT OF SPECIFICATION ⇨ Replace and/or charge the battery. Refer to “BATTERY CHARGING” in CHAPTER 2.

For SX600/MM600:
Check the condenser.
Refer to “IGNITION SYSTEM”.

OK ⇩ OUT OF SPECIFICATION ⇨ Replace the condenser.

Check the stator coil and pickup coil.
Refer to “IGNITION SYSTEM”.

OK ⇩ OUT OF SPECIFICATION ⇨ Replace the stator coil assembly.

Check the main switch.
Refer to “IGNITION SYSTEM”.

OK ⇩ NO CONTINUITY ⇨ Replace the main switch.

Check the grip and thumb warmer.

OK ⇩ NO CONTINUITY ⇨ Replace the grip and/or thumb warmer.

Check the variable resistors.

CORRECT ⇩ INCORRECT ⇨ Replace the variable resistors.

Check the load control relay.
Refer to “IGNITION SYSTEM”.

OK ⇩ FAULTY ⇨ Replace the load control relay.

Correct the connection and/or replace the rectifier/regulator and/or CDI unit.

PASSENGER GRIP WARMER DOES NOT OPERATE. (VT600)

Check the main fuse,
“IGNITION” fuse and “TAIL” fuse.
Refer to “FUSE INSPECTION” in CHAPTER 2.

OK ⇩ FAULTY ⇨ Replace the main fuse, “IGNITION” fuse and/or “TAIL” fuse.

Check the battery.
Refer to “BATTERY INSPECTION” in CHAPTER 2.

OK ⇩ OUT OF SPECIFICATION ⇨ Replace and/or charge the battery.
Refer to “BATTERY CHARGING” in CHAPTER 2.

Check the stator coil and pickup coil.
Refer to “IGNITION SYSTEM”.

OK ⇩ OUT OF SPECIFICATION ⇨ Replace the stator coil assembly.

Check the main switch.
Refer to “IGNITION SYSTEM”.

OK ⇩ NO CONTINUITY ⇨ Replace the main switch.

Check the passenger grip warmer.

OK ⇩ NO CONTINUITY ⇨ Replace the passenger grip warmer.

Check the passenger grip warmer switch.

OK ⇩ NO CONTINUITY ⇨ Replace the passenger grip warmer switch.

Check the resistor.

CORRECT ⇩ INCORRECT ⇨ Replace the resistor.

Check the passenger grip warmer relay.

OK ⇩ FAULTY ⇨ Replace the passenger grip warmer relay.

Check the load control relay.
Refer to “IGNITION SYSTEM”.

OK ⇩ FAULTY ⇨ Replace the load control relay.

Correct the connection and/or
replace the rectifier/regulator
and/or CDI unit.

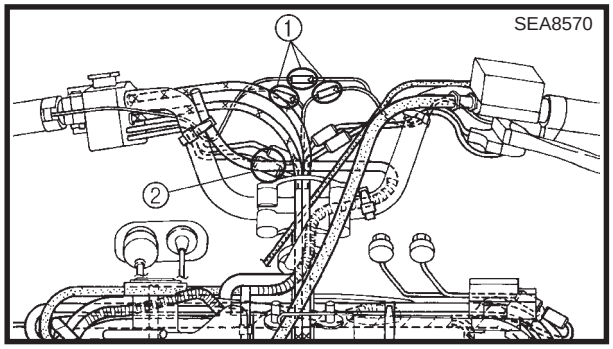

GRIP AND THUMB WARMER COIL

1. Disconnect:
   - Grip warmer leads ①
   - Thumb warmer coupler ②
2. Connect:
   - Pocket tester
     (to the grip warmer coil leads and/or thumb warmer coil leads)

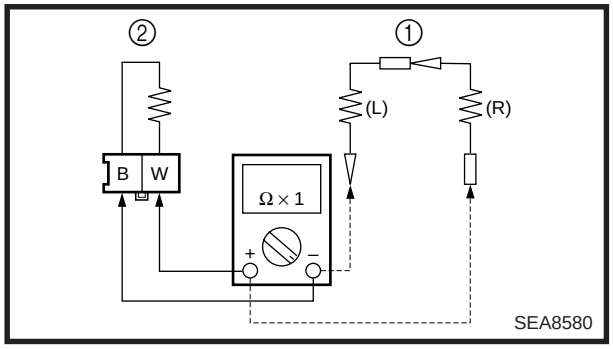

3. Check:
   - Grip warmer ① continuity
   - Thumb warmer ② continuity
     No continuity → Replace both grips together or separately and/or the handlebar switch.

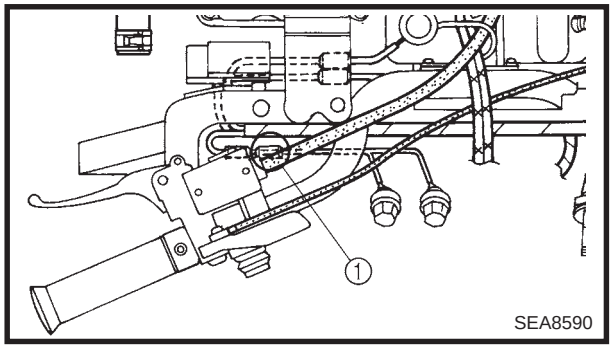

VARIABLE RESISTOR (THUMB WARMER)

1. Disconnect:
   - Variable resistor coupler ①
2. Connect:
   - Pocket tester
     (to the variable resistor coupler)

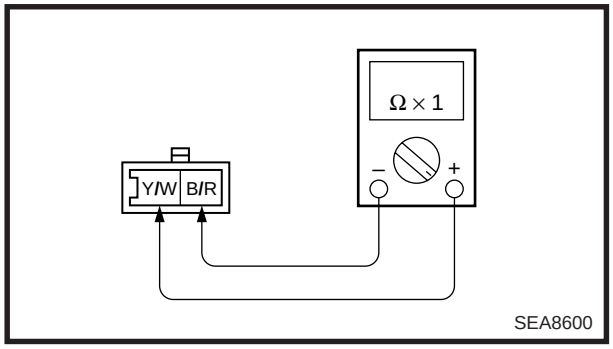

3. Check:
   - Variable resistor resistance
     When pulley is turned once.
     Out of specification → Replace the variable resistor.

Variable resistor resistance:
(Yellow/White – Black/Red)
400 ~ 600 Ω at 20°C (68°F)

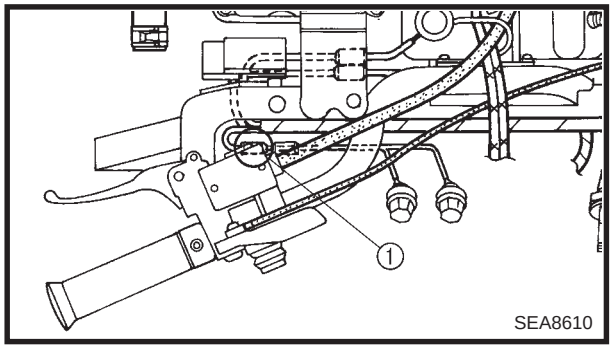

VARIABLE RESISTOR (GRIP WARMER)

1. Disconnect:
   - Variable resistor coupler ①
2. Connect:
   - Pocket tester
     (to the variable resistor coupler)

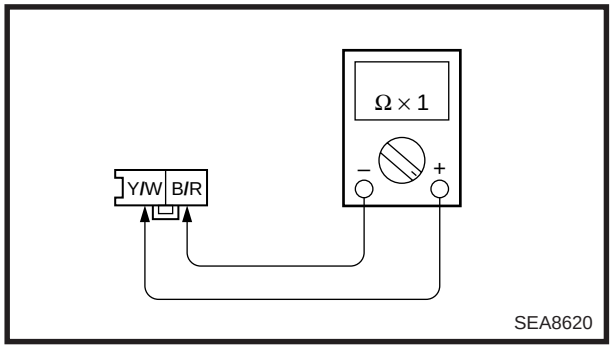

3. Check:
   - Variable resistor resistance
     When pulley is turned once.
     Out of specification → Replace the variable resistor.

Variable resistor resistance:
(Yellow/White – Black/Red)
400 ~ 600 Ω at 20°C (68°F)

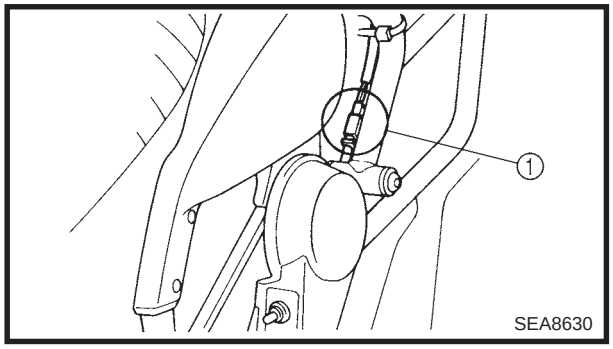

PASSENGER GRIP WARMER (VT600)

1. Disconnect:
   - Passenger grip warmer coupler ①
2. Connect:
   - Pocket tester
     (to the passenger grip warmer coupler)

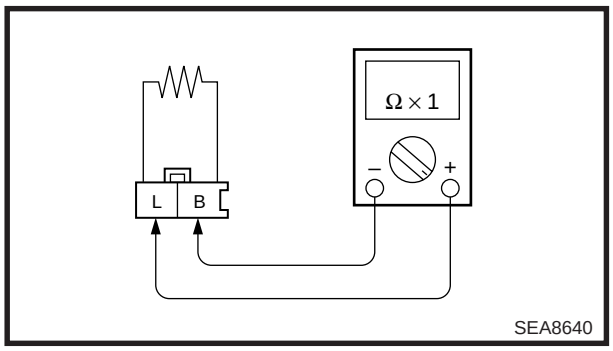

3. Check:
   - Passenger grip warmer continuity
     No continuity → Replace both passenger grips together or separately.

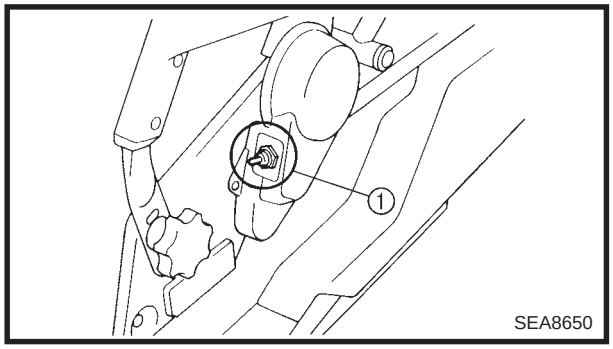

PASSENGER GRIP WARMER SWITCH (VT600)

1. Disconnect:
   - Passenger grip warmer switch coupler ①
2. Connect:
   - Pocket tester
     (to the passenger grip warmer switch coupler)

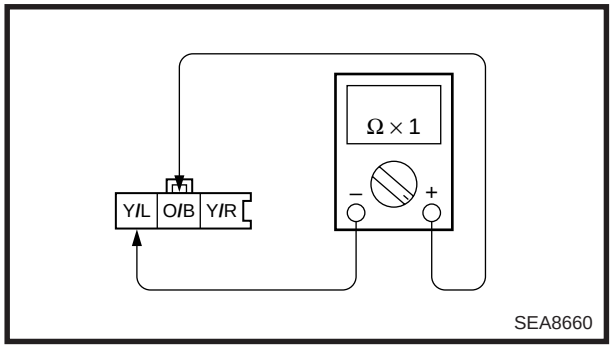

3. Check:
   - Passenger grip warmer switch continuity
     Faulty → Replace.

	Y/L	O/B	Y/R
LO	○——○		
OFF			
HI		○——○	

○——○ Continuity

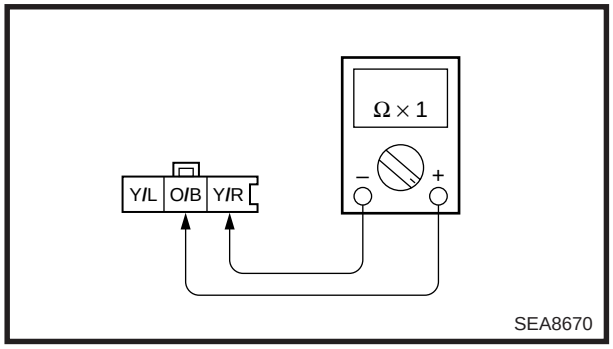

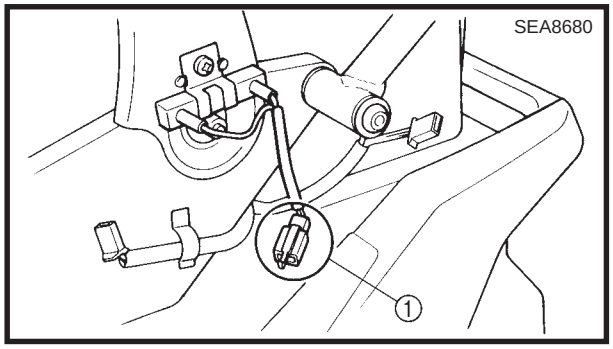

RESISTOR (VT600)

1. Disconnect:
   - Resistor coupler ①
2. Connect:
   - Pocket tester
     (to the resistor coupler)

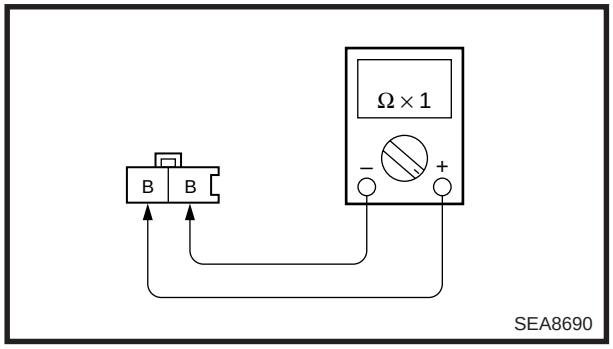

3. Measure:
   - Resistor resistance
     Out of specification → Replace.

Resistor resistance:
(Black – Black)
1.4 ~ 1.7 Ω at 20°C (68°F)

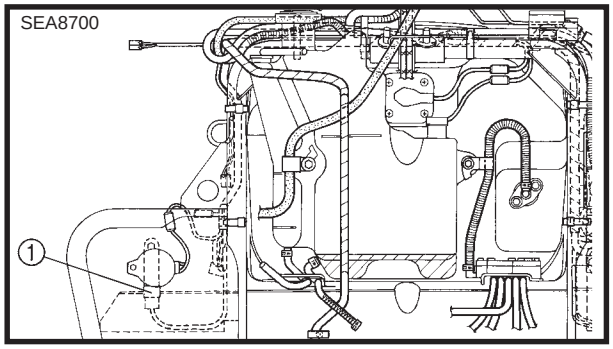

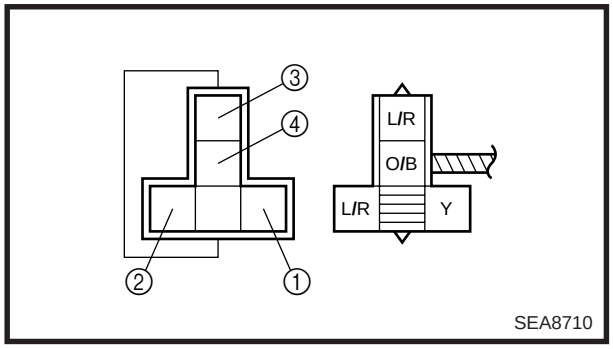

PASSENGER GRIP WARMER RELAY (VT600)

1. Inspect:
   - Passenger grip warmer relay ①

Inspection steps:

- Disconnect the passenger grip warmer relay from the coupler.
- Connect the pocket tester (Ω × 1) and battery (12 V) to the passenger grip warmer relay terminals as shown.

Positive battery terminal → Blue/Red ①
Negative battery terminal → Yellow ②
Positive tester probe → Blue/Red ③
Negative tester probe → Orange/Black ④

- If load control relay does not have continuity between the blue/red and orange/black terminals, replace it.

FAULT LOCATION TABLE

NOTE:

When more than one problem is detected, the water temperature indicator light flashes in the pattern of the lowest numbered problem. After that problem is corrected, the water temperature indicator light flashes in the pattern of the next lowest numbered problem. This continues until all of the problems are detected and corrected.

No.	Patterns	Condition	Reference
0	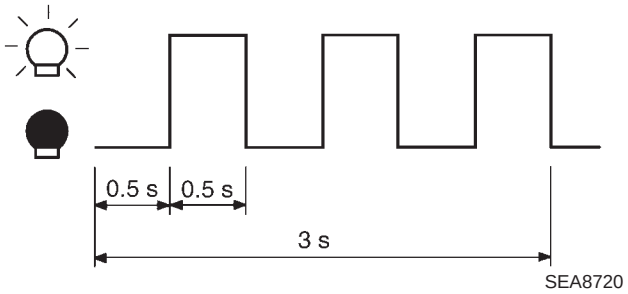 ∗ If the CDI unit is working properly, the water temperature indicator light flashes in this pattern when the engine is turned on.	• Water temperature indicator light is good. • If the water temperature indicator light does not come on replace it.	Refer to “SIGNAL SYSTEM”.
1	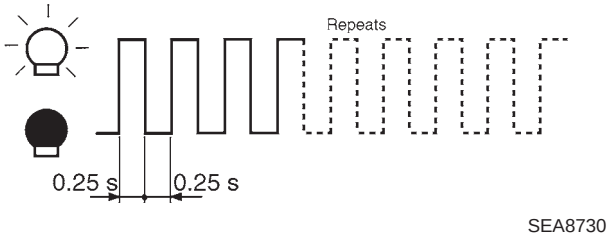	Overheat.	
2	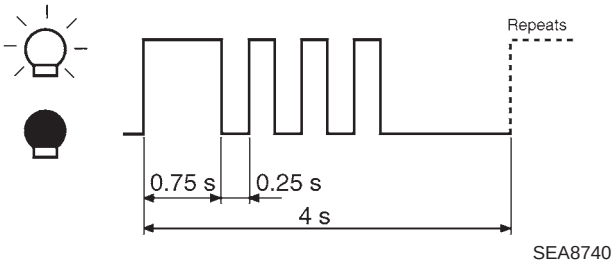	Shorting of the water temperature sensor is detected.	Refer to “WATER TEMPERATURE SENSOR”.
3	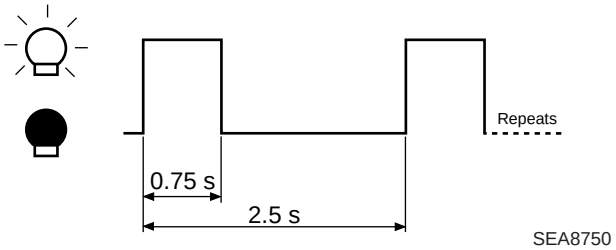	Discontinuity of the variable resistor (grip warmer) is detected.	Refer to “VARIABLE RESISTOR (GRIP WARMER)”.

ON : Warning light is on OFF : Warning light is off s : Second

No.	Patterns	Condition	Reference
4	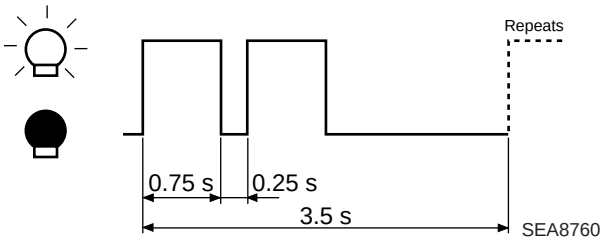	Shorting of grip warmer is detected.	Refer to “GRIP WARMER SYSTEM”.
5	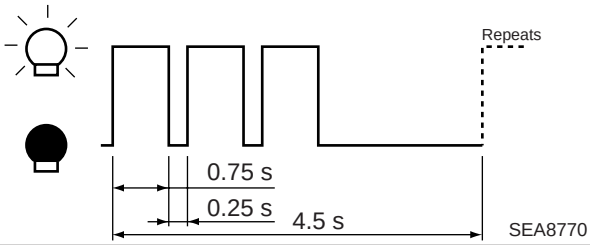	Discontinuity of the variable resistor (thumb warmer) is detected.	Refer to “VARIABLE RESISTOR (THUMB WARMER)”.
6	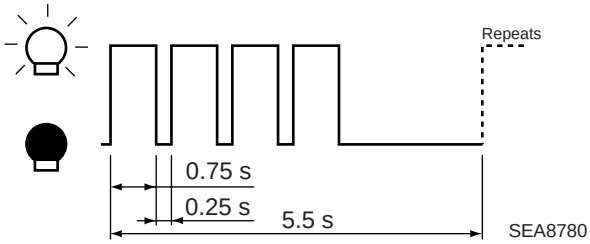	Shorting of thumb warmer is detected.	Refer to “GRIP WARMER SYSTEM”.
7	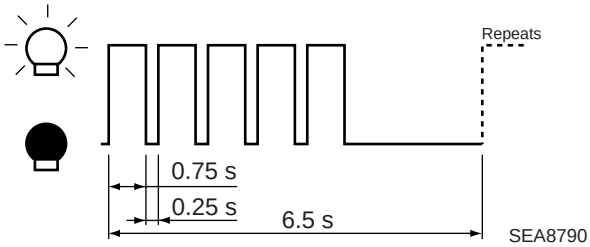	Abnormal electric source voltage	Refer to “GRIP WARMER SYSTEM”.

ON : Warning light is on OFF : Warning light is off s : Second

SPECIFICATIONS

GENERAL SPECIFICATIONS

Model	VX600ER/SX600/MM600/VT600
Model code number	8DG4 (VX600ER) 8EA4 (SX600) 8EJ3 (MM600) 8EB4 (VT600)
Dimensions:	
Overall length	2,780 mm (109.4 in) (VX600ER) 2,760 mm (108.7 in) (SX600) 2,990 mm (117.7 in) (MM600/VT600)
Overall width	1,200 mm (47.2 in) (VX600ER/SX600/VT600) 1,115 mm (43.9 in) (MM600)
Overall height	1,230 mm (48.4 in) (VX600ER/SX600) 1,215 mm (47.8 in) (MM600) 1,330 mm (52.4 in) (VT600)
Dry weight	229 kg (505 lb) (VX600ER) 222 kg (489 lb) (SX600) 234 kg (516 lb) (MM600) 257 kg (567 lb) (VT600)
Minimum turning radius:	
Clockwise	4.0 m (13.1 ft)
Counterclockwise	4.0 m (13.1 ft)
Engine:	
Engine type	Liquid cooled 2-stroke, 7-port
Induction system	Crankcase reed valve
Cylinder arrangement	Forward inclined parallel 3-cylinder
Displacement	593 cm^3 (36.2 cu.in)
Bore × Stroke	65.0 × 59.6 mm (2.56 × 2.35 in)
Compression ratio	6.6 : 1
Maximum horse power r/min	8,500 r/min
Maximum torque r/min	8,250 r/min
Starting system	Recoil hand starter (SX600/MM600) Electric and recoil hand starter (VX600ER/VT600)
Lubrication system	Separate lubrication (YAMAHA AUTOLUBE)
Engine oil:	
Type	YAMALUBE 2-cycle oil
Tank capacity	3.0 L (2.6 Imp qt, 3.2 US qt)
Drive chain housing oil:	
Type	Gear oil API “GL-3” SAE #75 or #80
Capacity	0.25 L (8.8 Imp oz, 8.5 US oz)
Coolant:	
Total amount	3.8 L (3.34 Imp qt, 4.02 US qt) (VX600ER/SX600) 4.0 L (3.52 Imp qt, 4.23 US qt) (MM600) 4.1 L (3.61 Imp qt, 4.33 US qt) (VT600)
Reservoir tank capacity	0.28 L (0.25 Imp qt, 0.30 US qt)

Model	VX600ER/SX600/MM600/VT600
Fuel:	
Type	Regular unleaded gasoline (Pump Octane $\frac{R + M}{2}$; 88 or higher) Research Octane; 93 or higher (for Europe)
Tank capacity	44.3 L (9.7 Imp gal, 11.7 US gal)
Carburetor:	
Type/Quantity	TM31/3
Manufacturer	MIKUNI
Spark plug:	
Type	BR9ES
Manufacturer	NGK
Gap	0.7 ~ 0.8 mm (0.028 ~ 0.031 in)
Transmission:	
Primary reduction system	V-Belt
Primary reduction ratio	3.8 ~ 1.0 : 1
Clutch type	Automatic centrifugal engagement
Secondary reduction system	Chain
Secondary reduction ratio	1.857 (39/21) (VX600ER) 1.950 (39/20) (SX600) (VT600 for U.S.A./Canada) 2.053 (39/19) (MM600) 2.167 (39/18) (VT600 for Europe)
Reverse system	No (SX600/MM600) Yes (VX600ER/VT600)
Chassis:	
Frame type	Monocoque
Caster angle	25.5°
Ski stance (center to center)	1,070 mm (42.1 in) (VX600ER/SX600/VT600) 980 mm (38.6 in) (MM600)
Suspension:	
Front suspension type	Leading arm
Rear suspension type	Slide rail suspension
Track:	
Track type	Internal drive type
Track width	381 mm (15.0 in)
Length on ground	752 mm (29.6 in) (VX600ER/SX600) 887 mm (34.9 in) (MM600) 944 mm (37.2 in) (VT600)
Track deflection mm/10 kg (22 lb)	25 ~ 30 mm (0.98 ~ 1.18 in) (VX600ER/SX600/VT600) 20 ~ 25 mm (0.79 ~ 0.98 in) (MM600)
Brake:	
Brake type	Caliper type disc brake
Operation method	Handle lever, left hand operated
Electrical:	
Ignition system/Manufacturer	DC-CDI/MITSUBISHI
Generator system	AC magneto

Model	VX600ER/SX600/MM600/VT600
Bulb wattage × Quantity:	
Headlight	12 V, 60 W/55 W × 2
Tail/Brake light	12 V, 8 W/23 W × 1
Tachometer light	12 V, 1.7 W × 1
Speedometer light	12 V, 1.7 W × 1
High beam indicator light	12 V, 1.7 W × 1
Water temperature indicator light	12 V, 1.7 W × 1
Oil level indicator light	12 V, 1.7 W × 1

MAINTENANCE SPECIFICATIONS

ENGINE

Model	VX600ER/SX600/MM600/VT600
Cylinder head:	
Volume (with spark plug)	18.7 ~ 19.3 cm^3 (1.14 ~ 1.18 cu.in)
<Warp limit> 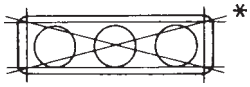	<0.03 mm (0.0012 in)> ∗Lines indicate straight edge measurement.
Cylinder:	
Material	Aluminum alloy with dispersion coating
Bore size	65.000 ~ 65.014 mm (2.5591 ~ 2.5596 in)
<Wear limit>	<65.100 mm (2.5630 in)>
<Taper limit>	<0.05 mm (0.002 in)>
<Out-of-round limit>	<0.01 mm (0.0004 in)>
Piston:	
Piston size (D) 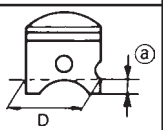	64.932 ~ 64.935 mm (2.5564 ~ 2.5565 in)
Measuring point ⓐ	10 mm (0.39 in)
Piston to-cylinder clearance	0.065 ~ 0.070 mm (0.0026 ~ 0.0028 in)
<Limit>	<0.15 mm (0.006 in)>
Piston offset	0.5 mm (0.0197 in)
Piston offset direction	EX side
Piston pin bore inside diameter	20.004 ~ 20.015 mm (0.7876 ~ 0.7880 in)
Piston pin:	
Piston pin outside diameter	19.995 ~ 20.000 mm (0.7872 ~ 0.7874 in)
Piston pin length	55.7 ~ 56.0 mm (2.193 ~ 2.205 in)
Piston ring:	
Sectional sketch	
Top Ring 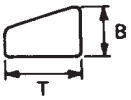	Keystone B = 1.20 mm (0.047 in) T = 2.55 mm (0.100 in)
2nd Ring 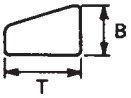	Keystone B = 1.20 mm (0.047 in) T = 2.55 mm (0.100 in)
End gap (installed) Top Ring	0.35 ~ 0.55 mm (0.014 ~ 0.022 in)
2nd Ring	0.35 ~ 0.55 mm (0.014 ~ 0.022 in)
Side clearance (installed) Top Ring	0.02 ~ 0.06 mm (0.0008 ~ 0.0024 in)
2nd Ring	0.02 ~ 0.06 mm (0.0008 ~ 0.0024 in)
Plating/coating Top Ring	Chrome plated/Parkerrizing
2nd Ring	Chrome plated/Parkerrizing

Model	VX600ER/SX600/MM600/VT600
Crankshaft:	
Crank width “A”	55.95 ~ 56.00 mm (2.203 ~ 2.205 in)
Crank width “B”	291.75 ~ 292.30 mm (11.486 ~ 11.508 in)
Maximum runout “C” : C_1	0.03 mm (0.0012 in)
C_2 ~ C_5	0.04 mm (0.0016 in)
C_6	0.03 mm (0.0012 in)
Measuring points: 1	90 mm (3.54 in)
2	85 mm (3.35 in)
Connecting rod big end side clearance “D”	0.25 ~ 0.75 mm (0.01 ~ 0.03 in)
Connecting rod big end radial clearance “E”	0.026 ~ 0.040 mm (0.0010 ~ 0.0016 in)
Connecting rod small end free play “F”	0.8 ~ 1.0 mm (0.03 ~ 0.04 in)

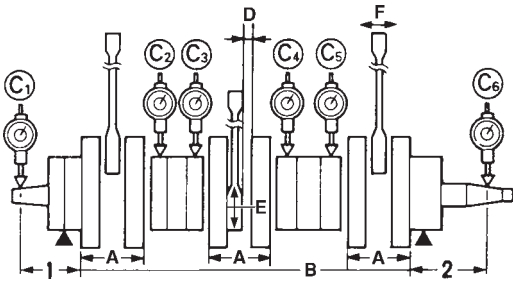

Big end bearing:	
Type	Needle bearing
Small end bearing:	
Type	Needle bearing
Crank pin:	
Crank pin outside diameter	26.991 ~ 27.000 mm (1.0626 ~ 1.0630 in)
Connecting rod:	
Small end diameter	24.995 ~ 25.005 mm (0.9841 ~ 0.9844 in)
Big end diameter	34.020 ~ 34.033 mm (1.3394 ~ 1.3399 in)
Read valve:	
Material	Resin
Thickness	0.35 ~ 0.49 mm (0.014 ~ 0.019 in)
<Bending limit>	<1.5 mm (0.059 in)>
Stopper height	10.3 ~ 10.7 mm (0.41 ~ 0.42 in)

Model	VX600ER/SX600/MM600/VT600
Carburetor:	
Type/Quantity	TM31/3
Manufacturer	MIKUNI
I.D. mark	8DG100
Main jet (M.J)	#1: 136.3 #2, #3: 133.8
Pilot jet (P.J)	#42.5
Jet needle (J.N)	6DHN50-3
Needle jet (N.J)	#1: Q-4 #2, #3: Q-2
Pilot air jet (P.A.J)	ø1.0
Pilot outlet (P.O)	ø0.8
Bypass (B.P.1)	ø0.9
Pilot screw (P.S)	2 turns out
Throttle valve (Th.V)	C.A 3
Valve seat size (V.S)	ø1.3
Starter jet (G.S)	ø1.5
Float height (F.H)	11.3 ~ 15.3 mm (0.44 ~ 0.60 in)
Fuel level (from the bore center)	36 ~ 38 mm (1.42 ~ 1.50 in)
Engine idle speed	1,600 ± 100 r/min
Fuel pump:	
Type	Diaphragm
Manufacturer	TAIYO GIKEN
Oil pump:	
Pump cable adjusting distance	23 ± 1 mm (0.906 ± 0.039 in)
Cooling system:	
Filler cap opening pressure	95 ~ 125 kPa (0.95 ~ 1.25 kg/cm^2, 14 ~ 18 psi)
Water pump type	Impeller type
Coolant type	High quality ethylene glycol antifreeze containing corrosion inhibitors
Coolant mixing ratio (coolant:water)	3:2 (60%:40%)
Coolant total amount	3.8 L (3.34 Imp qt, 4.02 US qt) (VX600ER/SX600) 4.0 L (3.52 Imp qt, 4.23 US qt) (MM600) 4.1 L (3.61 Imp qt, 4.33 US qt) (VT600)
Reservoir tank capacity	0.28 L (0.25 Imp qt, 0.30 US qt)

POWER TRAIN

Model	VX600ER/SX600/MM600/VT600
Transmission:	
Type	V-belt automatic
Range of ratio	3.8 ~ 1.0 :1
Engagement speed r/min	4,000 ± 200 r/min (3,800 ~ 4,200 r/min) (VX600ER) (VT600 for U.S.A./Canada) 4,200 ± 200 r/min (4,000 ~ 4,400 r/min) (SX600) 4,600 ± 200 r/min (4,400 ~ 4,800 r/min) (MM600) 3,900 ± 200 r/min (3,700 ~ 4,100 r/min) (VT600 for Europe)
Shift r/min	8,500 ± 250 r/min (8,250 ~ 8,750 r/min)
Sheave distance “A”	267 ~ 270 mm (10.52 ~ 10.62 in)
Sheave offset “B”	13.5 ~ 16.5 mm (0.53 ~ 0.64 in) (SX600/MM600) 18.5 ~ 21.5 mm (0.73 ~ 0.85 in) (VX600ER/VT600)
V-Belt:	
Part number/Manufacturer	8DN-17641-00/MITSUBOSHI
Circumference	1,129 ~ 1,137 mm (44.4 ~ 44.7 in)
Width “A”	34.5 mm (1.36 in)
<Wear limit “B”>	<32.5 mm (1.28 in)>
Primary sheave spring:	
Part number	90501-582L7 (VX600ER/SX600) 90501-603L2 (MM600) 90501-602L9 (VT600 for U.S.A./Canada) 90501-582L2 (VT600 for Europe)
Color code	Yellow-Green-Yellow (VX600ER/SX600) Yellow-White-Yellow (MM600) Pink-Green-Pink (VT600 for U.S.A./Canada) Green-Silver-Green (VT600 for Europe)
Diameter	60 mm (2.362 in)
Wire diameter	5.8 mm (0.228 in) (VX600ER/SX600) (VT600 for Europe) 6.0 mm (0.236 in) (MM600) (VT600 for U.S.A./Canada)
Preload	392 N (40 kg, 88 lb) (VX600ER/SX600) (VT600 for U.S.A./Canada) 441 N (45 kg, 99 lb) (MM600) 343 N (35 kg, 77 lb) (VT600 for Europe)
Spring rate	24.5 N/mm (2.50 kg/mm, 140 lb/in) (VX600ER/SX600/MM600) 29.4 N/mm (3.00 kg/mm, 168 lb/in) (VT600 for U.S.A./Canada) 27.0 N/mm (2.75 kg/mm, 154 lb/in) (VT600 for Europe)
Number of coils	4.92 (VX600ER/SX600) 5.39 (MM600) 4.82 (VT600 for U.S.A./Canada) 4.66 (VT600 for Europe)
Free length	89.4 mm (3.52 in) (VX600ER/SX600) 91.4 mm (3.60 in) (MM600) 86.7 mm (3.41 in) (VT600 for U.S.A./Canada) 87.4 mm (3.44 in) (VT600 for Europe)

Model	VX600ER/SX600/MM600/VT600
Primary sheave weight arm:	
Part number (with bushing)	8DG-17605-00
Weight	34.30 g (1.211 oz)
Rivet:	
Outer	
Part number	90261-06028 (VX600ER/MM600) 90261-06015 (SX600) 90261-06034 (VT600)
Material	Aluminum (VX600ER/MM600) Steel (SX600/VT600)
Size	10.3 mm (0.41 in) (VX600ER/SX600/MM600) 13.9 mm (0.55 in) (VT600)
Quantity	3
Hole quantity	3
Inner	
Part number	90261-06034 (VX600ER/SX600) 90261-06015 (MM600) 90261-06033 (VT600)
Material	Steel
Size	13.9 mm (0.55 in) (VX600ER/SX600) 10.3 mm (0.41 in) (MM600) 17.2 mm (0.68 in) (VT600)
Quantity	3
Hole quantity	3
Secondary sheave spring:	
Part number	90508-536A9 (VX600ER/SX600/MM600) (VT600 for U.S.A./Canada) 90508-556A2 (VT600 for Europe)
Color code	Red (VX600ER/SX600/MM600) (VT600 for U.S.A./Canada) Green (VT600 for Europe)
Outside diameter	69.5 mm (2.736 in)
Wire diameter	5.3 mm (0.209 in) (VX600ER/SX600/MM600) (VT600 for U.S.A./Canada) 5.5 mm (0.217 in) (VT600 for Europe)
Hole position	
Sheave side-spring seat side (twist angle)	2-6 (80°) (VX600ER/SX600/MM600) (VT600 for Europe) 1-6 (70°) (VT600 for U.S.A./Canada)
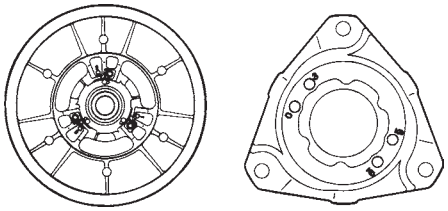	
Spring rate	7.3 N/mm (0.74kg/mm, 41.44 lb/in) (VX600ER/SX600/MM600) (VT600 for U.S.A./Canada) 8.5 N/mm (0.87kg/mm, 48.72 lb/in) (VT600 for Europe)
Number of coils	5.53
Free length	75 mm (2.95 in)
Torque cam angle	47° (VX600ER/SX600) 43° (MM600/VT600)

Model	VX600ER/SX600/MM600/VT600
Drive chain:	
Type	REXNORD S37TNB13
Number of links	68 L
Track:	
Part number	8DY-47110-00 (VX600ER) 8EA-47110-10 (SX600) 8ED-47110-01 (MM600) 8DM-47110-00 (VT600 for U.S.A./Canada) 8CC-47110-11 (VT600 for Europe)
Width	381 mm (15.0 in)
Length	3,072 mm (120.9 in) (VX600ER/SX600) 3,584 mm (141.1 in) (MM600) 3,456 mm (136.1 in) (VT600)
Pitch	64 mm (2.52 in)
Number of links	48 (VX600ER/SX600) 56 (MM600) 54 (VT600)
Thickness “A”	5.1 mm (0.20 in) (VX600ER) (VT600 for U.S.A./Canada)) 5.5 mm (0.22 in) (SX600) (VT600 for Europe) 7.250 mm (0.29 in) (MM600)
Height “B” 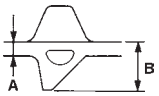	30.50 mm (1.20 in) (VX600ER) (VT600 for U.S.A./Canada)) 28.50 mm (1.12 in) (SX600) 58.05 mm (2.29 in) (MM600) 33.50 mm (1.32 in) (VT600 for Europe)
Track deflection at 10 kg (22 lb)	25 ~ 30 mm (0.98 ~ 1.18 in) (VX600ER/SX600/VT600) 20 ~ 25 mm (0.79 ~ 0.98 in) (MM600)
Slide rail suspension (Rear suspension):	
Travel (Rear suspension stroke)	292 mm (11.5 in)
Front travel	238 mm (9.37 in) (VX600ER/SX600) 205 mm (8.07 in) (MM600) 235 mm (9.25 in) (VT600)
Rear travel	273 mm (10.75 in) (VX600ER/SX600) 270 mm (10.63 in) (MM600/VT600)
Suspension spring rate	
Front	19.6 N/mm (2.0 kg/mm, 112 lb/in) (VX600ER) 14.8 ~ 24.5 N/mm (1.5 ~ 2.5 kg/mm, 84 ~ 140 lb/in) (SX600) 29.4 N/mm (3.0 kg/mm, 168 lb/in) (MM600) 14.7 N/mm (1.5 kg/mm, 84 lb/in) (VT600)
Rear	29.4 ~ 44.1 N/mm (3.0 ~ 4.5 kg/mm, 168 ~ 252 lb/in) (VX600ER) 27.44 ~ 47.04 N/mm (2.8 ~ 4.8 kg/mm, 157 ~ 269 lb/in) (SX600) 22.54 ~ 42.14 N/mm (2.3 ~ 4.3 kg/mm, 129 ~ 241 lb/in) (MM600) 34.3 ~ 51.94 N/mm (3.5 ~ 5.3 kg/mm, 196 ~ 297 lb/in) (VT600)
Spring wire diameter	
Front	7.8 mm (0.31 in) (VX600ER/SX600/VT600) 8.2 mm (0.32 in) (MM600)
Rear	11.5 mm (0.452 in) (VX600ER) 11.4 mm (0.448 in) (SX600) 10.8 mm (0.425 in) (MM600) 12.0 mm (0.472 in) (VT600)

Model	VX600ER/SX600/MM600/VT600
Suspension setting position: Hook setting length ∗ 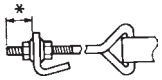 Full rate adjusting position ∗∗ 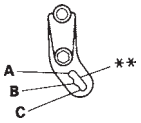	 15 ± 0.5 mm (0.59 ± 0.02 in) (VX600ER) 25 ± 0.5 mm (0.98 ± 0.02 in) (SX600/VT600) 10 ± 0.5 mm (0.39 ± 0.02 in) (MM600) B
Shock absorber: Damping force Front Extension Compression Rear Extension Compression	 720 N/0.3 m/s (73 kg/0.3 m/s, 161 lb/0.3 m/s) (VX600ER) 2,380 N/0.3 m/s (243 kg/0.3 m/s, 536 lb/0.3 m/s) (SX600) 1,570 N/0.3 m/s (160 kg/0.3 m/s, 357 lb/0.3 m/s) (MM600) 510 N/0.3 m/s (52 kg/0.3 m/s, 115 lb/0.3 m/s) (VT600) 1,020 N/0.3 m/s (104 kg/0.3 m/s, 229 lb/0.3 m/s) (VX600ER) 1,950 N/0.3 m/s (199 kg/0.3 m/s, 439 lb/0.3 m/s) (SX600) 860 N/0.3 m/s (88 kg/0.3 m/s, 194 lb/0.3 m/s) (MM600) 1,775 N/0.3 m/s (181 kg/0.3 m/s, 399 lb/0.3 m/s) (VT600) 2,206 N/0.3 m/s (225 kg/0.3 m/s, 496 lb/0.3 m/s) (VX600ER) 2,900 N/0.3 m/s (296 kg/0.3 m/s, 653 lb/0.3 m/s) (SX600) 1,570 N/0.3 m/s (160 kg/0.3 m/s, 357 lb/0.3 m/s) (MM600) 2,647 N/0.3 m/s (270 kg/0.3 m/s, 595 lb/0.3 m/s) (VT600) 726 N/0.3 m/s (74 kg/0.3 m/s, 163 lb/0.3 m/s) (VX600ER) 970 N/0.3 m/s (99 kg/0.3 m/s, 218 lb/0.3 m/s) (SX600) 860 N/0.3 m/s (88 kg/0.3 m/s, 194 lb/0.3 m/s) (MM600) 784 N/0.3 m/s (80 kg/0.3 m/s, 176 lb/0.3 m/s) (VT600)
Slide runner: Thickness <Wear limit>	 17.8 mm (0.70 in) <10 mm (0.39 in)>
Track sprocket wheel: Material Number of teeth	 Polyethylene 9 T (VX600ER/SX600/VT600) 8 T (MM600)
Rear guide wheel: Material Outside diameter	 Aluminum with rubber 178 mm (7.01 in)
Brake: Pad thickness <Pad wear limit> Pad to disk clearance Disc outside diameter Disc thickness <Disc thickness limit>	 10.2 mm (0.40 in) <4.7 mm (0.19 in)> 0.025 ~ 0.115 mm (0.001 ~ 0.005 in) 220 mm (8.66 in) 10 mm (0.39 in) <9.5 mm (0.37 in)>

CHASSIS

Model	VX600ER/SX600/MM600/VT600
Frame:	
Frame material	Aluminum
Seat height	730 mm (28.7 in) (VX600ER/SX600/VT600) 700 mm (27.6 in) (MM600)
Luggage box location	Rear side of seat
Steering:	
Lock-to-lock angle (left)	29.4° (R ski) 34.7° (L ski) (VX600ER/SX600/VT600)
(right)	34.7° (R ski) 29.4° (L ski) (VX600ER/SX600/VT600)
(left)	26.7° (R ski) 32.0° (L ski) (MM600)
(right)	32.0° (R ski) 26.7° (L ski) (MM600)
Ski alignment	Toe-out
Toe-out size	0 ~ 15 mm (0 ~ 0.59 in)
Caster angle	25.5°
Ski:	
Ski material	Plastic
Length	1,020 mm (40.2 in) (VX600ER/VT600) 1,010 mm (39.8 in) (SX600/MM600)
Width	132.0 mm (5.20 in) (VX600ER/VT600) 131.0 mm (5.16 in) (SX600) 139.7 mm (5.50 in) (MM600)
Ski suspension (Front suspension):	
Type	Proaction system
Travel (Front suspension stroke)	221 mm (9.0 in) (VX600ER/SX600/VT600) 170 mm (6.7 in) (MM600)
Spring type	Coil spring
Spring rate	22.54 N/mm (2.3 kg/mm, 128.8 lb/in) (VX600ER/VT600) 12.74 ~ 20.58 ~ 24.50 N/mm (1.3 ~ 2.1 ~ 2.5 kg/mm, 72.8 ~ 117.6 ~ 140 lb/in) (SX600) 20.58 N/mm (2.1 kg/mm, 117.6 lb/in) (MM600)
Wire diameter	8.2 mm (0.323 in) (VX600ER/VT600) 7.8 mm (0.307 in) (SX600) 7.5 mm (0.295 in) (MM600)
Shock absorber: damping force	
Extension	1,170 N/0.3 m/s (119 kg/0.3 m/s, 262 lb/0.3 m/s) (VX600ER) 1,597 N/0.3 m/s (163 kg/0.3 m/s, 359 lb/0.3 m/s) (SX600) 490 N/0.3 m/s (50 kg/0.3 m/s, 110 lb/0.3 m/s) (MM600) 1,274 N/0.3 m/s (130 kg/0.3 m/s, 287 lb/0.3 m/s) (VT600)
Compression	720 N/0.3 m/s (73 kg/0.3 m/s, 161 lb/0.3 m/s) (VX600ER) 461 N/0.3 m/s (47 kg/0.3 m/s, 104 lb/0.3 m/s) (SX600) 274 N/0.3 m/s (28 kg/0.3 m/s, 62 lb/0.3 m/s) (MM600) 794 N/0.3 m/s (81 kg/0.3 m/s, 179 lb/0.3 m/s) (VT600)

ELECTRICAL

Model	VX600ER/SX600/MM600/VT600
Voltage	12 V
Ignition system: Ignition timing (B.T.D.C.) Advanced type	 18° at 1,500 r/min Digital type
Ignition coil: Model/Manufacturer Minimum spark gap Primary coil resistance Secondary coil resistance	 F6T535/MITSUBISHI 6 mm (0.236 in) or more 0.36 ~ 0.48 Ω at 20°C (68°F) 5.4 ~ 7.4 kΩ at 20°C (68°F)
Spark plug cap: Type Model/Manufacturer Resistance	 Rubber type T156/TOKAI DENSO 5 kΩ at 20°C (68°F)
Charging system: Type Nominal output	 AC magneto 14 V/21 A at 5,000 r/min
DC-CDI: Magneto model/Manufacturer Standard Pickup coil resistance (color code) Stator coil resistance (color code) CDI unit model/Manufacturer	 F4T374/MITSUBISHI 14 V 21 A, 294W at 5,000 r/min 189 ~ 231 Ω at 20°C (68°F) (White/Red – White/Green) 0.36 ~ 0.44 Ω at 20°C (68°F) (White – White) F8T37573/MITSUBISHI
Rectifier/regulator: Type Model/Manufacturer No load regulated voltage DC Capacity (DC) Withstand voltage	 Semiconductor-short circuit type SH650A-12/SHINDENGEN 14.1 ~ 14.9 V 25 A 200 V
Battery (VX600ER/VT600): Specific gravity Manufacturer Type Ten hour rate amperage	 1.280 GS GM18Z-3A 2.0 A
Electric starter system (VX600ER/VT600): Type	 Bendix type

Model	VX600ER/SX600/MM600/VT600
Starter motor (VX600ER/VT600):	
Model/Manufacturer	DB4XF/DENSO
Output	12 V-0.6 kW
Armature coil resistance	
Continuity check	0.014 ~ 0.018 Ω at 20°C (68°F)
Insulation check	More than 100 kΩ at 20°C (68°F)
Brush	
Overall length	12 mm (0.47 in)
<Wear limit>	<8.5 mm (0.33 in)>
Spring pressure	6.38 ~ 9.32 N (650 ~ 950 g, 22.9 ~ 33.5 oz)
Commutator diameter	28 mm (1.10 in)
<Wear limit>	<27 mm (1.06 in)>
Mica undercut	0.6 mm (0.024 in)
Starter relay (VX600ER/VT600):	
Model/Manufacturer	MS5F-441/JIDECO
Amperage rating	180 A
Coil resistance	4.2 ~ 4.6 Ω at 20°C (68°F)
Oil level switch:	
Model/Manufacturer	8CR/ASTI
Fuel sender:	
Model/Manufacturer	8CW/NIPPON SEIKI
Sender resistance Full	4 ~ 10 Ω at 20°C (68°F)
Empty	90 ~ 100 Ω at 20°C (68°F)
Load control relay:	
Model/Manufacturer	8DM/MATSUSHITA
Coil resistance	76 ~ 92 Ω at 20°C (68°F)
Headlight relay:	
Model/Manufacturer	5DM/OMRON
Coil resistance	95 ~ 116 Ω at 20°C (68°F)
Grip warmer:	
Heater resistance (left)	1.53 ~ 1.87 Ω at 20°C (68°F)
(right)	1.53 ~ 1.87 Ω at 20°C (68°F)
Circuit breaker (VX600ER/VT600):	
Type	Fuse
Amperage for individual circuit	
Main fuse	30 A × 1
Head fuse	20 A × 1
Tail fuse	10 A × 1
Ignition fuse	10 A × 1
Reserve fuse	30 A × 1
Reserve fuse	20 A × 1
Reserve fuse	10 A × 1
Water temperature sensor:	
Model/Manufacturer	8CC/MITSUBISHI
Resistance	5.2 ~ 6.4 kΩ at 0°C (34°F)
	0.300 ~ 0.364 kΩ at 80°C (176°F)
	0.170 ~ 0.208 kΩ at 100°C (212°F)

HIGH ALTITUDE SETTINGS

Altitude \ Temperature	–40°C (–40°F)	–29°C (–20°F)	–18°C (0°F)	–7°C (20°F)	4°C (40°F)	16°C (60°F)
0 ~ 100 m (0 ~ 300 ft)	MJ #1 #142.5 MJ #2#3 #140 PJ #42.5 JN 3 PS 2	MJ #1 #140 MJ #2#3 #137.5 PJ #42.5 JN 3 PS 2	MJ #1 #137.5 MJ #2#3 #135 PJ #42.5 JN 3 PS 2	MJ #1 #135 MJ #2#3 #132.5 PJ #42.5 JN 3 PS 2	MJ #1 #132.5 MJ #2#3 #130 PJ #42.5 JN 3 PS 2 1/2	MJ #1 #130 MJ #2#3 #127.5 PJ #42.5 JN 3 PS 2 1/2
100 ~ 500 m (300 ~ 1,700 ft)	MJ #1 #141.3 MJ #2#3 #138.8 PJ #42.5 JN 3 PS 2	MJ #1 #138.8 MJ #2#3 #136.3 PJ #42.5 JN 3 PS 2	MJ #1 #136.3 MJ #2#3 #133.8 PJ #42.5 JN 3 PS 2	MJ #1 #133.8 MJ #2#3 #131.3 PJ #42.5 JN 3 PS 2	MJ #1 #131.3 MJ #2#3 #128.8 PJ #42.5 JN 2.5 PS 2 1/2	MJ #1 #128.8 MJ #2#3 #126.3 PJ #42.5 JN 2.5 PS 2 1/2
500 ~ 1,000 m (1,700 ~ 3,300 ft)	MJ #1 #140 MJ #2#3 #137.5 PJ #42.5 JN 3 PS 2	MJ #1 #137.5 MJ #2#3 #135 PJ #42.5 JN 3 PS 2	MJ #1 #135 MJ #2#3 #132.5 PJ #42.5 JN 2.5 PS 2	MJ #1 #132.5 MJ #2#3 #130 PJ #42.5 JN 2.5 PS 2 1/2	MJ #1 #130 MJ #2#3 #127.5 PJ #42.5 JN 2.5 PS 2 1/2	MJ #1 #127.5 MJ #2#3 #125 PJ #42.5 JN 2.5 PS 3
1,000 ~ 1,500 m (3,300 ~ 5,000 ft)	MJ #1 #138.8 MJ #2#3 #136.3 PJ #42.5 JN 3 PS 2	MJ #1 #136.3 MJ #2#3 #133.8 PJ #42.5 JN 2.5 PS 2	MJ #1 #133.8 MJ #2#3 #131.3 PJ #42.5 JN 2.5 PS 2 1/2	MJ #1 #131.3 MJ #2#3 #128.8 PJ #42.5 JN 2.5 PS 2 1/2	MJ #1 #128.8 MJ #2#3 #126.3 PJ #42.5 JN 2 PS 3	MJ #1 #126.3 MJ #2#3 #123.8 PJ #45 JN 2 PS 3
1,500 ~ 2,000 m (5,000 ~ 6,700 ft)	MJ #1 #136.3 MJ #2#3 #133.8 PJ #42.5 JN 2.5 PS 2	MJ #1 #133.8 MJ #2#3 #131.3 PJ #42.5 JN 2.5 PS 2 1/2	MJ #1 #131.3 MJ #2#3 #128.8 PJ #42.5 JN 2 PS 2 1/2	MJ #1 #128.8 MJ #2#3 #126.3 PJ #42.5 JN 2 PS 3	MJ #1 #126.3 MJ #2#3 #123.8 PJ #45 JN 2 PS 3	MJ #1 #123.8 MJ #2#3 #121.3 PJ #45 JN 1.5 PS 3 1/4
2,000 ~ 2,500 m (6,700 ~ 8,300 ft)	MJ #1 #133.8 MJ #2#3 #131.3 PJ #42.5 JN 2 PS 2 1/2	MJ #1 #131.3 MJ #2#3 #128.8 PJ #42.5 JN 2 PS 2 1/2	MJ #1 #128.8 MJ #2#3 #126.3 PJ #42.5 JN 2 PS 3	MJ #1 #126.3 MJ #2#3 #123.8 PJ #45 JN 1.5 PS 3	MJ #1 #123.8 MJ #2#3 #121.3 PJ #45 JN 1.5 PS 3 1/4	MJ #1 #121.3 MJ #2#3 #118.8 PJ #45 JN 1.5 PS 3 1/4
2,500 ~ 3,000 m (8,300 ~ 10,000 ft)	MJ #1 #131.3 MJ #2#3 #128.8 PJ #42.5 JN 1.5 PS 2 1/2	MJ #1 #128.8 MJ #2#3 #126.3 PJ #42.5 JN 1.5 PS 3	MJ #1 #126.3 MJ #2#3 #123.8 PJ #45 JN 1.5 PS 3	MJ #1 #123.8 MJ #2#3 #121.3 PJ #45 JN 1.5 PS 3 1/4	MJ #1 #121.3 MJ #2#3 #118.8 PJ #45 JN 1 PS 3 1/4	MJ #1 #118.8 MJ #2#3 #116.3 PJ #45 JN 1 PS 3 1/4

[Production spec] MJ#1: #136.3 MJ#2, 3: #133.8 PJ: #42.5 JN: 6DHN50-3 PAJ: 1.0 PS: 2
#: Main jet number JN: Jet needle clip position PS: Pilot screw turns out PJ: Pilot jet number

NOTE:

- Jet needle (JN) position.
  Refer to the following information for the Jet needle shims installation.

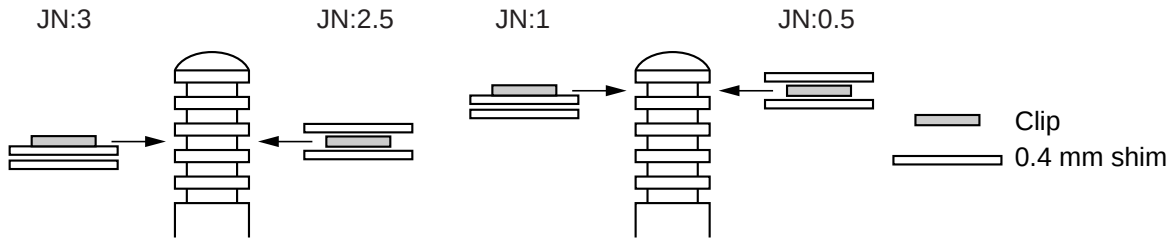

- Oxygenated fuels
  Use one size larger Main Jet than specified.

TIGHTENING TORQUE

ENGINE

Parts to be tightened	Tightening torque			Remarks
	Nm	m · kg	ft · lb	
Crankcase (M8 × 80) (1st)	13	1.3	9.4	Tighten the bolts in two stages.
(2nd)	27	2.7	19	
Crankcase (M8 × 35)	15	1.5	11	
Engine bracket (front) and frame	90	9.0	65	
Engine bracket damper (front/rear)	40	4.0	29	
Engine bracket (front) and engine	33	3.3	24	
Engine bracket right (rear) and engine	33	3.3	24	
Engine bracket left (rear) and engine	33	3.3	24	
Engine bracket (rear) and frame	57	5.7	41	
Exhaust joint (1st)	18	1.8	13	Tighten the bolts in two stages.
(2nd)	27	2.7	19	
Water pump cover	13	1.3	9.4	
Cylinder head				
Nut (1st)	11	1.1	8.0	Tighten the nuts in two stages.
(2nd)	23	2.3	17	
Cylinder				
Nut	28	2.8	20	
Spark plug	20	2.0	14	
Water temperature sensor	23	2.3	17	
Ignition coil and bracket	10	1.0	7.2	
Thermostatic cover	10	1.0	7.2	
Oil pump	8	0.8	5.8	Apply LOCTITE®
Oil pump cable adjuster locknut	15	1.5	11	
Fuel pump	10	1.0	7.2	
Starter pulley	23	2.3	17	
Drive plate	18	1.8	13	Apply LOCTITE®
Recoil starter case	12	1.2	8.7	
Clamp and intake manifold	14	1.4	10	
Bracket and intake manifold	14	1.4	10	
Reed valve assembly	1	0.1	0.7	Apply LOCTITE®
Carburetor				
Pilot jet	0.7	0.07	0.51	
Screw (valve seat)	1	0.1	0.7	
Main jet	1.8	0.18	1.3	
Pilot air jet	0.7	0.07	0.51	
Starter plunger assembly	2.5	0.25	1.8	
Clamp (coolant hose 2)	7	0.7	5.1	
Impeller	10	1.0	7.2	
Carburetor heating lever assembly	5	0.5	3.6	
Coolant drain bolt	13	1.3	9.4	
Bleed bolt front (cooling system)	7	0.7	5.1	
Bleed bolt rear (cooling system)	13	1.3	9.4	(VX600ER/SX600/VT600)
	4	0.4	2.9	(MM600)
Magneto rotor	110	11	80	
Starter motor	23	2.3	17	(VX600ER/VT600)
Starter motor assembly	7	0.7	5.1	(VX600ER/VT600)

POWER TRAIN

Parts to be tightened	Tightening torque			Remarks
	Nm	m · kg	ft · lb	
Primary sheave (1st)	120	12.0	85	Tighten the bolts in two
(2nd)	60	6.0	43	stages. See NOTE.
Spider and fixed sheave	200	20.0	145	Left-hand thread. Apply LOCTITE®
Primary sheave cap and sliding sheave	14	1.4	10	
Roller and weight nut (primary sheave)	6	0.6	4.3	
Set screw (weight)	4	0.4	2.9	Apply LOCTITE®
Starter motor driven gear	20	2.0	14	(VX600ER/VT600)Apply LOCTITE®
Secondary sheave	64	6.4	46	
Secondary sheave plate 1, 2	4	0.4	2.9	(SX600)
Stopper (secondary sheave)	6.5	0.65	4.6	
Spring seat (secondary sheave)	23	2.3	17	
Bolt (secondary sheave clearance)	10	1.0	7.2	
Drive sprocket	60	6.0	43	
Locknut chain tensioner	24	2.4	17	
Chain housing and frame	48	4.8	35	
Driven sprocket	48	4.8	35	Apply LOCTITE®
Drain bolt (drive chain housing)	16	1.6	11	
Chain housing cover	24	2.4	17	
Shift lever assembly	10	1.0	7.2	(VX600ER/VT600)
Lever and drive chain housing cover	13	1.3	9.4	(VX600ER/VT600)Apply LOCTITE®
Shaft (reverse drive gear)	10	1.0	7.2	(VX600ER/VT600)Apply LOCTITE®
Chain housing and brake caliper	48	4.8	35	
Bleed screw (brake caliper)	6	0.6	4.3	
Brake hose	30	3.0	22	
Brake hose joint				
Brake master cylinder side	14	1.4	10	
Brake hose side	30	3.0	22	
Bearing set screw (jackshaft)	8.5	0.85	6.1	Apply LOCTITE®
Bearing holder (jackshaft)	23	2.3	17	
Stopper band	4	0.4	2.9	
Hook and front pivot arm	16	1.6	11	
Wheel bracket and sliding frame	24	2.4	17	
Bracket bolt (rear)	30	3.0	22	(VX600ER/SX600)Apply LOCTITE®
Bracket bolt (front)	72	7.2	52	(VX600ER/SX600)Apply LOCTITE®
Front suspension bracket bolt (rear)	30	3.0	22	(MM600/VT600)
Front suspension bracket bolt (front)	72	7.2	52	(MM600/VT600)Apply LOCTITE®
Shaft and sliding frame	72	7.2	52	(MM600/VT600)Apply LOCTITE®
Front pivot arm and front pivot arm bracket	72	7.2	52	Apply LOCTITE®
Front pivot arm bracket and sliding frame	72	7.2	52	
Suspension wheel	72	7.2	52	
Rear axle	75	7.5	54	
Slide rail suspension mounting bolt (M10)	72	7.2	52	Apply LOCTITE®
(M8)	24	2.4	17	(VT600)

Parts to be tightened	Tightening torque			Remarks
	Nm	m · kg	ft · lb	
Rear pivot arm and bracket	24	2.4	17	
Shock absorber and rear pivot arm	49	4.9	35	
Rear pivot arm and pull rod	49	4.9	35	Apply LOCTITE®
Rear suspension bracket and pull rod	49	4.9	35	Apply LOCTITE®
Shock absorber and rear suspension bracket	49	4.9	35	
Control rod and sliding frame	72	7.2	52	Apply LOCTITE®
Shock absorber and front pivot arm	49	4.9	35	
Shock absorber and front suspension bracket	49	4.9	35	
Rear pivot arm bracket	72	7.2	52	Apply LOCTITE®
Rear bracket and suspension wheel	72	7.2	52	(VT600) Apply LOCTITE®
Wheel bracket shaft and sliding frame	72	7.2	52	Apply LOCTITE®
Set screw (front axle)	8.5	0.85	6.1	Apply LOCTITE®
Speedometer gear assembly	20	2.0	14	

NOTE:

Tightening steps:

1. Tighten the bolt to a torque of 120 Nm (12 m · kg, 85 ft · lb).
2. Loosen the bolt completely.
3. Retighten the bolt to a torque of 60 Nm (6.0 m · kg, 43 ft · lb).

CHASSIS

Parts to be tightened	Tightening torque			Remarks
	Nm	m · kg	ft · lb	
Handlebar holder	23	2.3	17	
Steering column				
Upper	23	2.3	17	
Lower	23	2.3	17	
Steering column and relay rod	35	3.5	25	
Relay rod and relay arm	35	3.5	25	
Relay arm and tie rod	35	3.5	25	
Tie rod and steering arm	43	4.3	31	
Relay arm	80	8.0	58	Apply LOCTITE®
Locknut (relay rod/tie rod)	25	2.5	18	Apply LOCTITE®
Ski	48	4.8	35	
Ski runner	21	2.1	15	
Ski column lower bracket	11	1.1	8.0	
Ski and ski handle (M8 × 55)	11	1.1	8.0	(VX600ER/VT600)
Ski and ski handle (M8 × 100)	17	1.7	12	(VX600ER/VT600)
Ski and ski handle	11	1.1	8.0	(SX600/MM600)
Shock absorber (upper)	48	4.8	35	Apply LOCTITE®
Shock absorber (lower)	48	4.8	35	Apply LOCTITE®
Steering arm and ski column	56	5.6	40	
Lower control rod and frame	50	5.0	36	
Upper control rod and frame	50	5.0	36	
Control rod and front arm	56	5.6	40	
Locknut (control rod) (M12)	56	5.6	40	Apply LOCTITE®
Locknut (control rod) (M14)	73	7.3	53	Apply LOCTITE®
Front arm pivot bolt	78	7.8	56	Apply LOCTITE®
Stabilizer bar and connecting rod	23	2.3	17	
Connecting rod and front arm	23	2.3	17	
Frame cross member (M10 × 20)	48	4.8	35	Apply LOCTITE®
Master cylinder assembly	10	1.0	7.2	
Brake lever adjuster locknut	6	0.6	4.3	
Side cover	3	0.3	2.2	(MM600)
Seat and frame (nut)	9	0.9	6.5	
Shroud	3	0.3	2.2	

GENERAL TORQUE SPECIFICATIONS

This chart specifies torque for standard fasteners with standard I.S.O. pitch threads. Torque specifications for special components or assemblies are included in the applicable sections of this book. To avoid warpage, tighten multi-fastener assemblies in a crisscross fashion, in progressive stages, until full torque is reached. Unless otherwise specified, torque specifications call for clean, dry threads. Components should be at room temperature.

A (nut)	B (bolt)	General torque specifications		
		Nm	m · kg	ft · lb
10 mm	6 mm	6	0.6	4.3
12 mm	8 mm	15	1.5	11
14 mm	10 mm	30	3.0	22
17 mm	12 mm	55	5.5	40
19 mm	14 mm	85	8.5	61
22 mm	16 mm	130	13.0	94

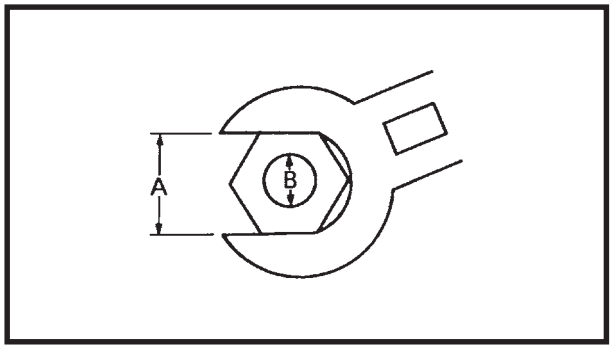

A: Distance across flats
B: Outside thread diameter

DEFINITION OF UNITS

Unit	Read	Definition	Measurement
mm cm	Millimeter Centimeter	10^{-3} meter 10^{-2} meter	Length Length
kg	Kilogram	10^{3} gram	Weight
N	Newton	1 kg × m/sec^2	Force
Nm m · kg	Newton meter Meter kilogram	N × m m × kg	Torque Torque
Pa N/mm	Pascal Newtons per millimeter	N/m^2 N/mm	Pressure Spring rate
L cm^3	Liter Cubic centimeter	—	Volume or capacity
r/min	Rotations per minute	—	Engine speed

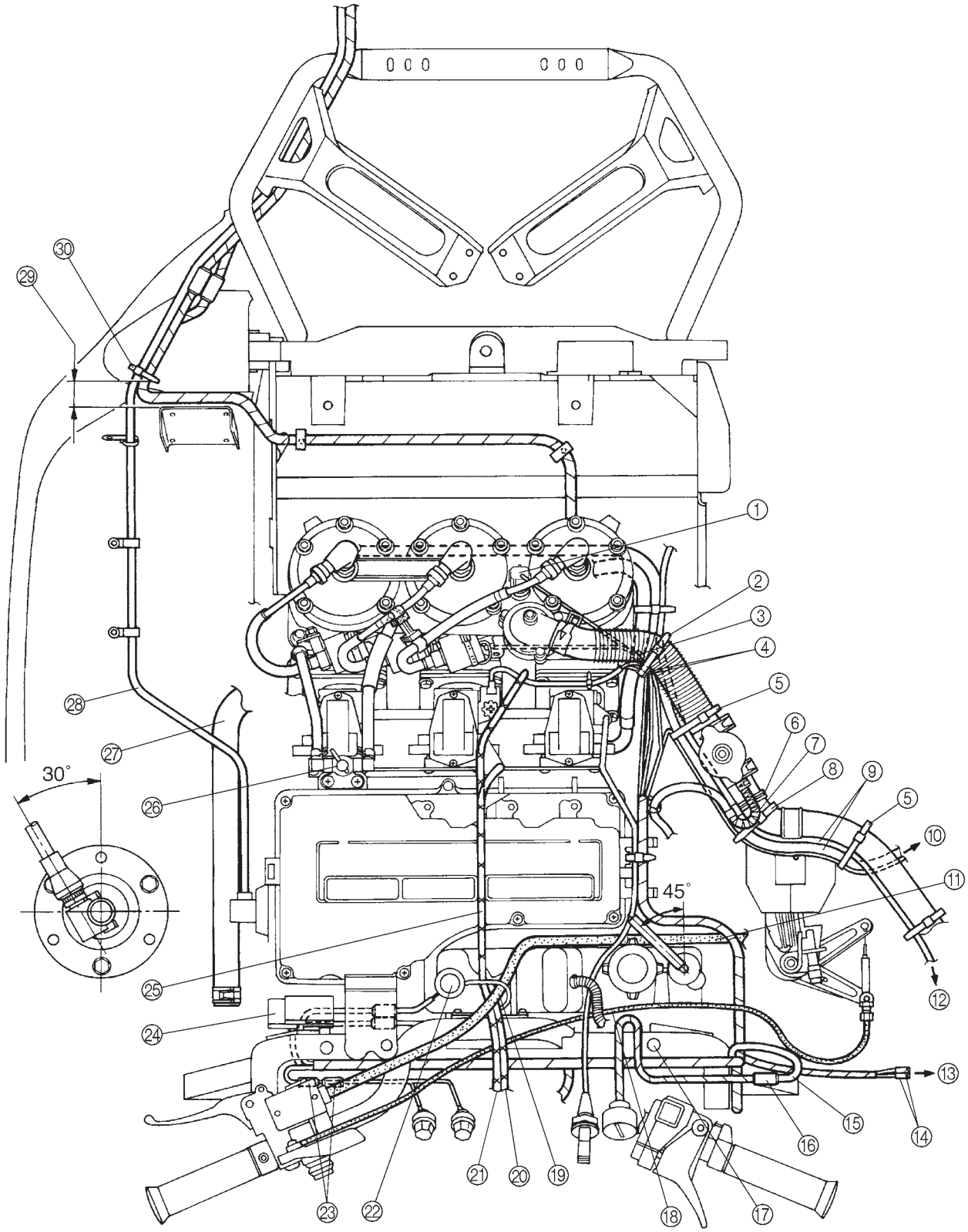
30°
45°
1
2
3
4
5
6
7
8
9
5
10
11
12
13
14
15
16
17
18
19
20
21
22
23
24
25
26
27
28
29
30

SEA9010

CABLE ROUTING

① Water temperature sensor coupler

② Fasten the carburetor switch leads and water temperature sensor leads and ignition coil leads to the coolant hose with a plastic band. For the VX600ER/VT600, include the starter motor and battery negative leads.

③ Ignition coil coupler

④ Connectors of the carburetor switch

⑤ Fasten the starter motor and battery negative leads and starter relay leads to the coolant hose with a plastic band. (VX600ER/VT600)

⑥ Fasten the coolant reservoir hose and coolant hose with a plastic clamp.

⑦ Ensure this is not kink.

⑧ Fasten the starter motor and battery negative leads to the coolant hose with a plastic band above the brake caliper. (VX600ER/VT600)

⑨ Route the starter motor and battery negative leads behind the coolant hose. (VX600ER/VT600)

⑩ To the starter relay (VX600ER/VT600)

⑪ Brake hose

⑫ To the battery negative terminal (VX600ER/VT600)

⑬ To the gear position switch (VX600ER/VT600)

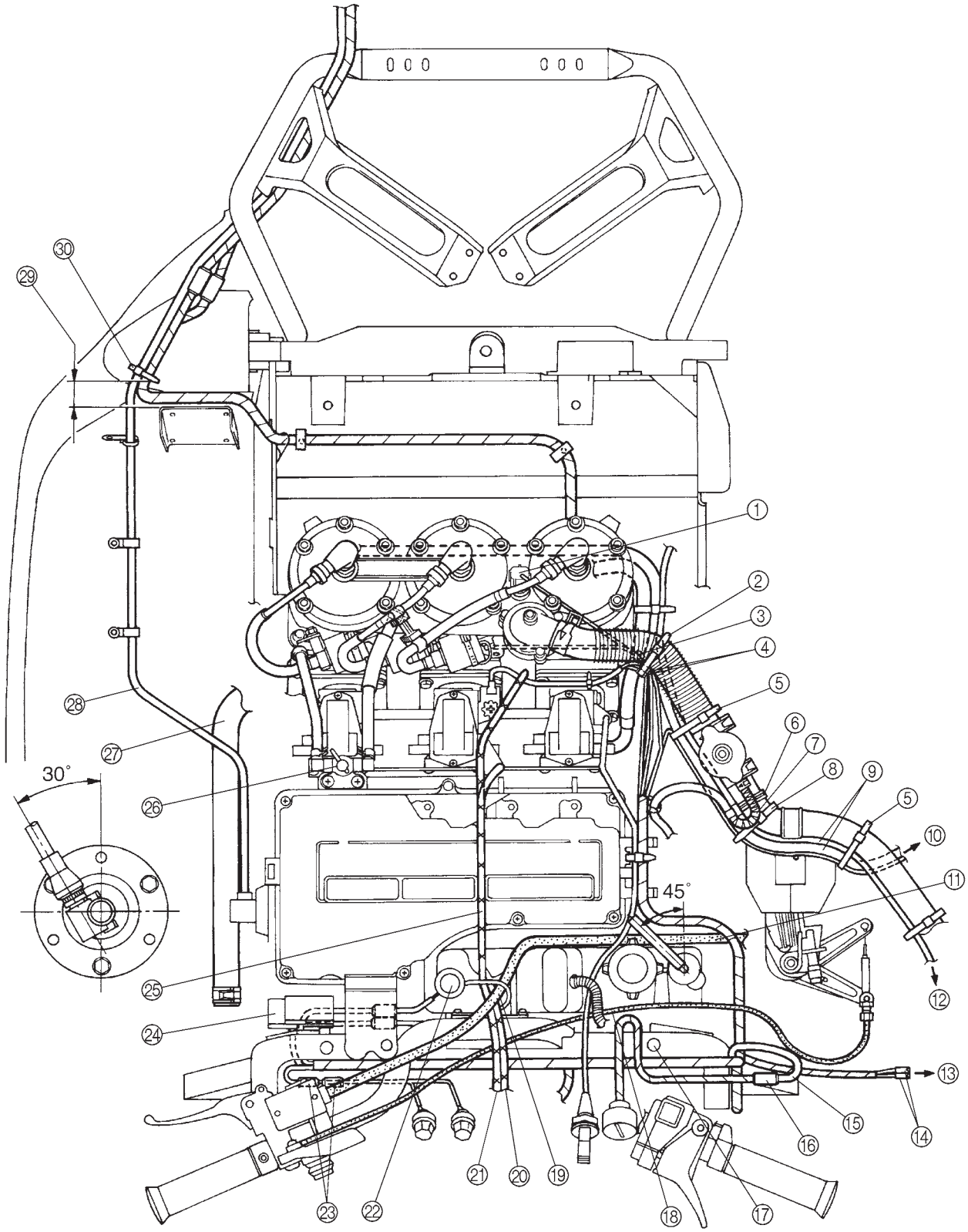
30°
45°
1
2
3
4
5
6
7
8
9
5
10
11
12
13
14
15
16
17
18
19
20
21
22
23
24
25
26
27
28
29
30

SEA9010

⑭ Connectors of the gear position switch (VX600ER/VT600)

⑮ Route the main switch wire harness under the oil tank breather hose and fuel tank breather hose.

⑯ Install the main switch coupler behind the instrument panel.

⑰ Make sure that the main switch wire harness is on the inside of the instrument panel screw (away from the engine).

⑱ Route the parking brake cable under the oil tank breather hose.

⑲ Make sure that the brake hose passes over the oil pump and throttle cables and through the right side of the hose guide. (VX600ER/VT600)

⑳ Oil pump cable (VX600ER/VT600)

㉑ Throttle cable (VX600ER/VT600)

㉒ Oil level switch

㉓ Variable resistor couplers

㉔ Fuse box (VX600ER/VT600)

㉕ Route the oil pump and throttle cables in the groove of the intake silencer and route the throttle cable above the oil pump cable. (VX600ER/VT600)

㉖ Carburetor heating lever

㉗ Coolant hose

㉘ Speedometer cable

㉙ Under 50 mm (1.97 in)

㉚ Fasten the speedometer cable and wire harness with a plastic clamp. Install the clamp as close to the drive V-belt guard bracket, as possible (rearward).

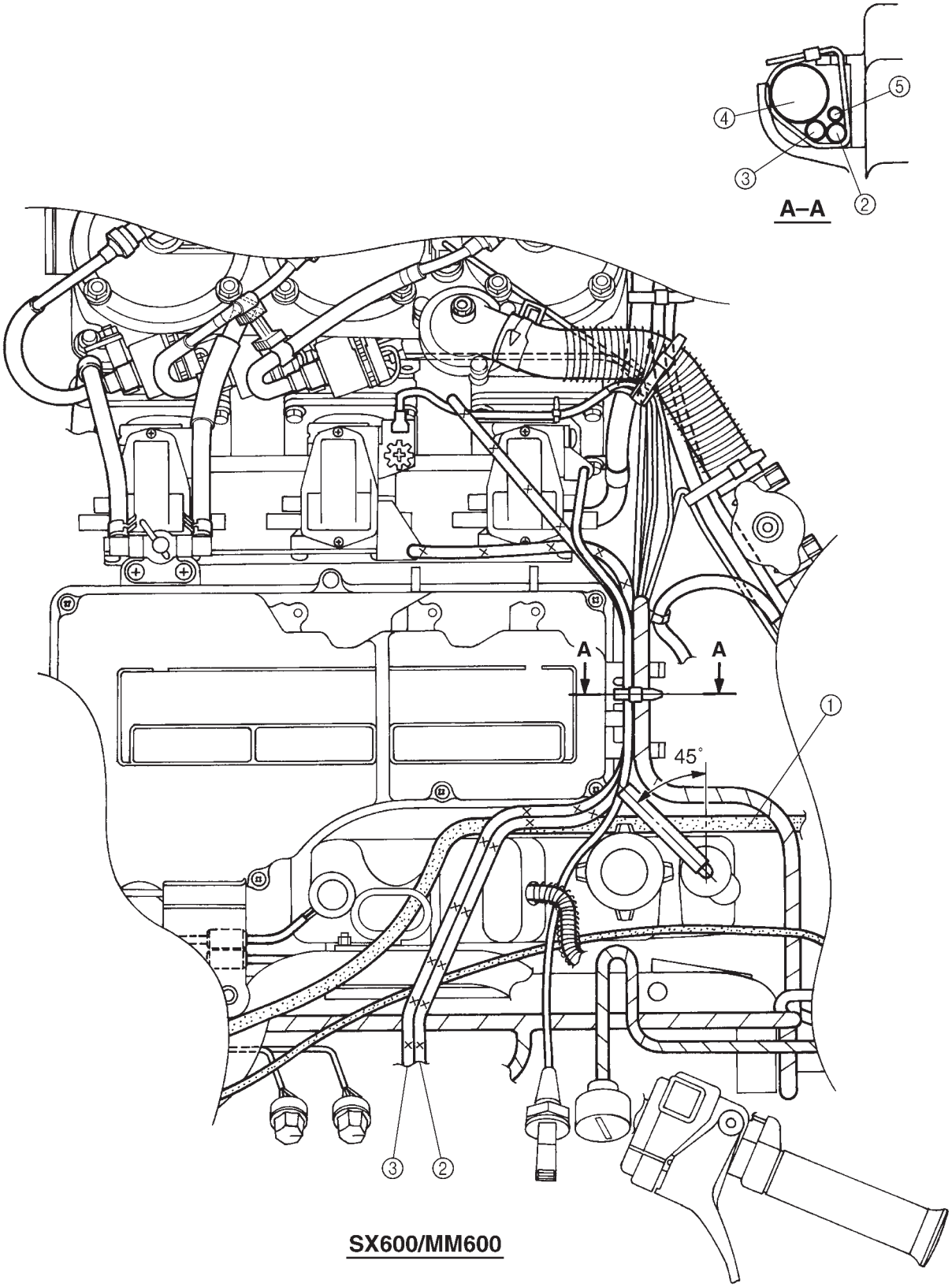

SEA9020

① Brake hose
② Oil pump cable
③ Throttle cable
④ Wire harness
⑤ Starter cable

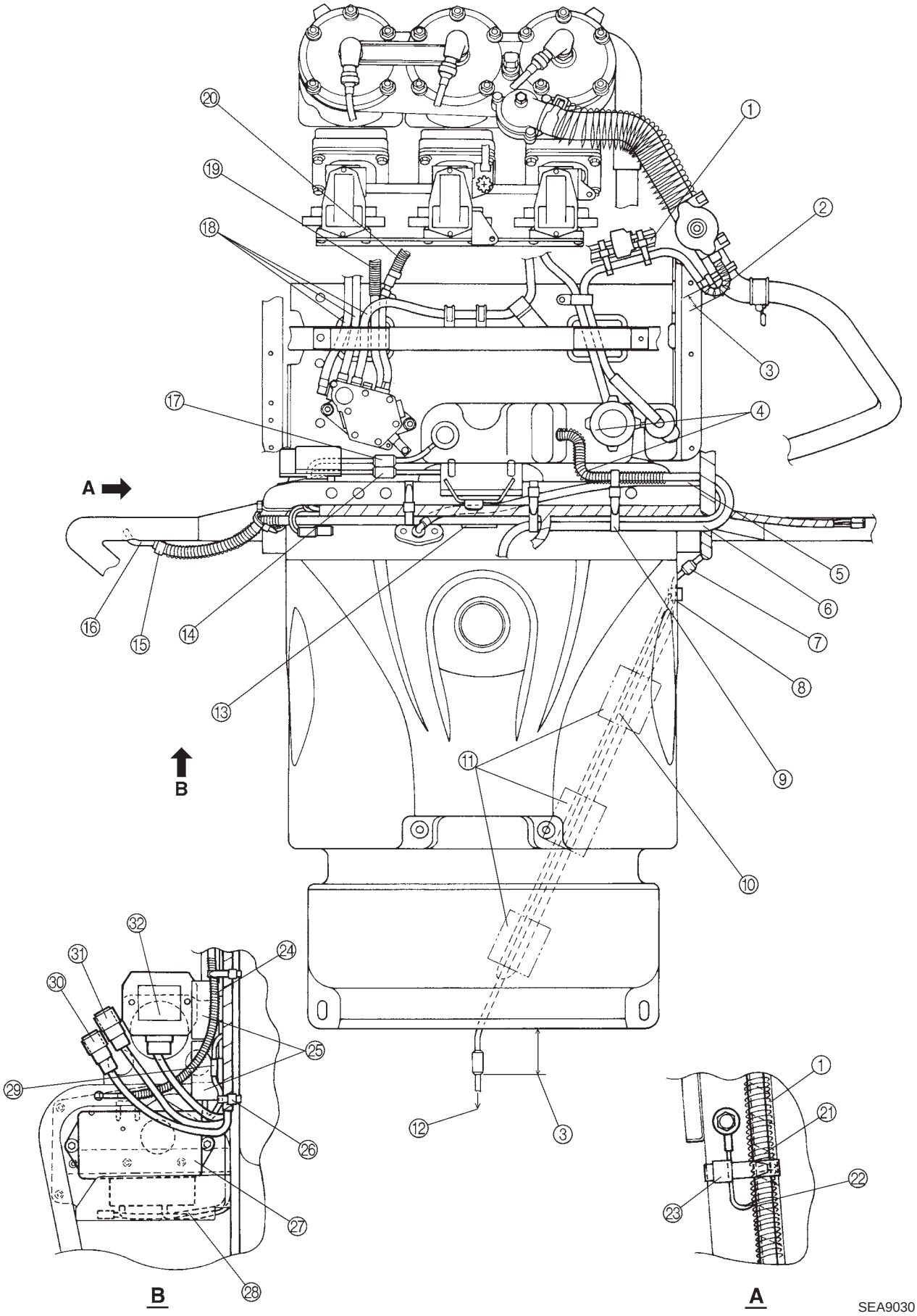
A
B
B
A
SEA9030

① Wire harness
② Ensure this is not kink.
③ 50 mm (1.97 in)
④ Make sure that the oil tank cap and oil tank breather hose do not touch each other.
⑤ Route the fuel tank breather hose over the main switch wire harness.
⑥ Route the oil tank breather hose over the main switch wire harness.
⑦ Install the tail/brake light lead behind the instrument panel.
⑧ When fastening the tail/brake light lead with the attached clamp, bend the clamp inward to fasten it.
⑨ Fasten the oil tank breather hose, fuel tank breather hose and wire harness at the inside of the instrument panel screw with a plastic band.
⑩ Route the tail/brake light lead between the fuel tank and the snowmobile body. Make sure that the fuel tank does not crush the tail/brake light lead. Then, fasten the three pieces of adhesive tape below the fuel tank as shown.
⑪ Adhesive tapes
⑫ To the tail/brake light
⑬ Pass the wire harness and fuel tank breather hose through the cable holder.
⑭ Fuel sender coupler
⑮ Install the metal clip facing downward.
⑯ Insert the fuel tank breather hose until it can not be inserted further.
⑰ Oil level switch coupler
⑱ Fuel delivery hoses
⑲ Vacuum hose
⑳ Oil delivery hose

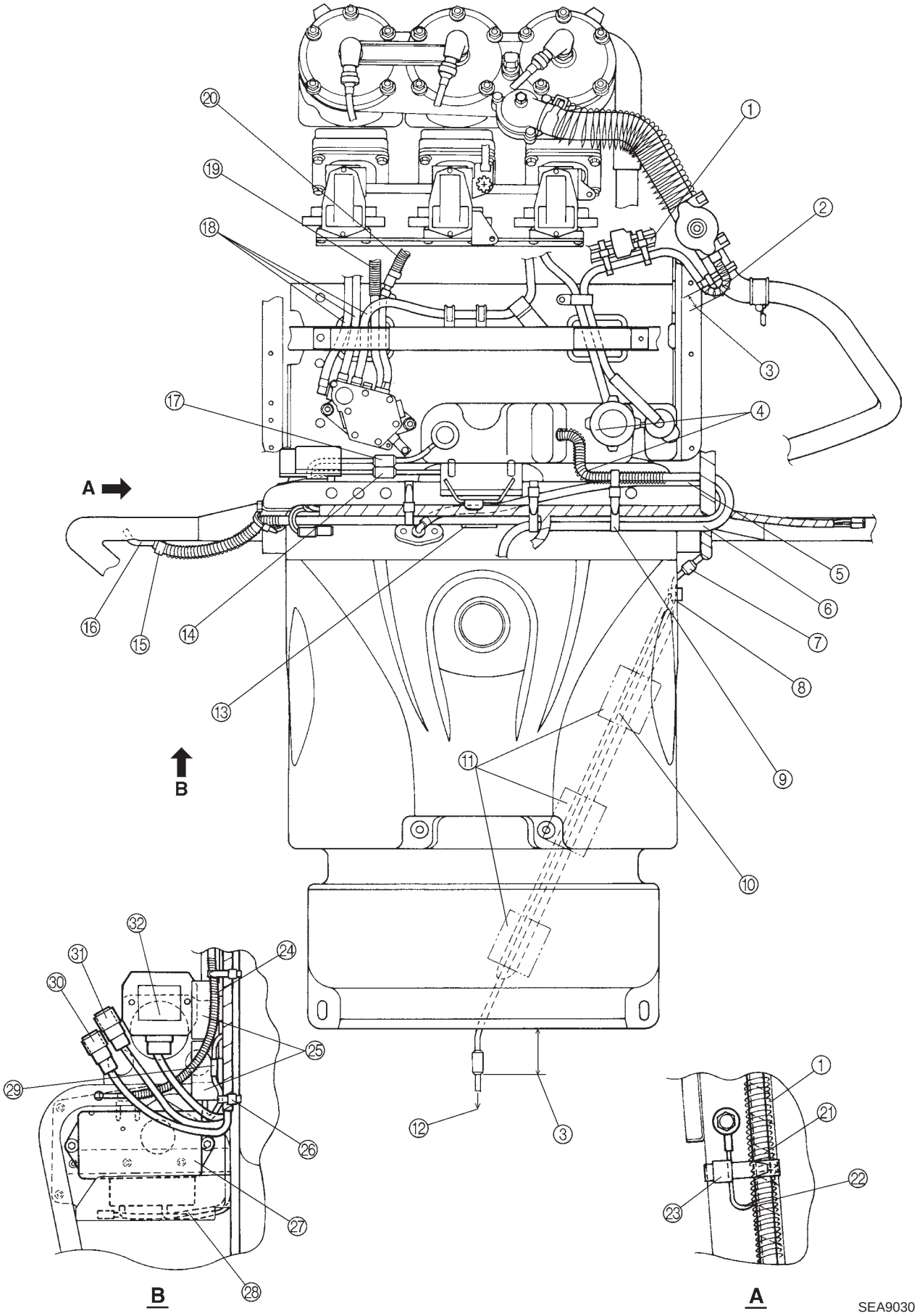
A
B
B
A
SEA9030

㉑ Fuel tank breather hose

㉒ Ground lead

㉓ Install the clamp so that it does not come into contact with the ground lead terminal.

㉔ Route the fuel tank breather hose behind the condenser. (SX600/MM600)

㉕ Condenser (SX600/MM600)

㉖ Fasten the CDI unit leads with a plastic band. For the SX600/MM600, include the condenser leads.

㉗ CDI unit

㉘ Pass the CDI unit lead behind the footrest.

㉙ Condenser coupler (SX600/MM600)

㉚ Load control relay (with the white coupler)

㉛ Headlight relay (with the black coupler)

㉜ Rectifier/regulator

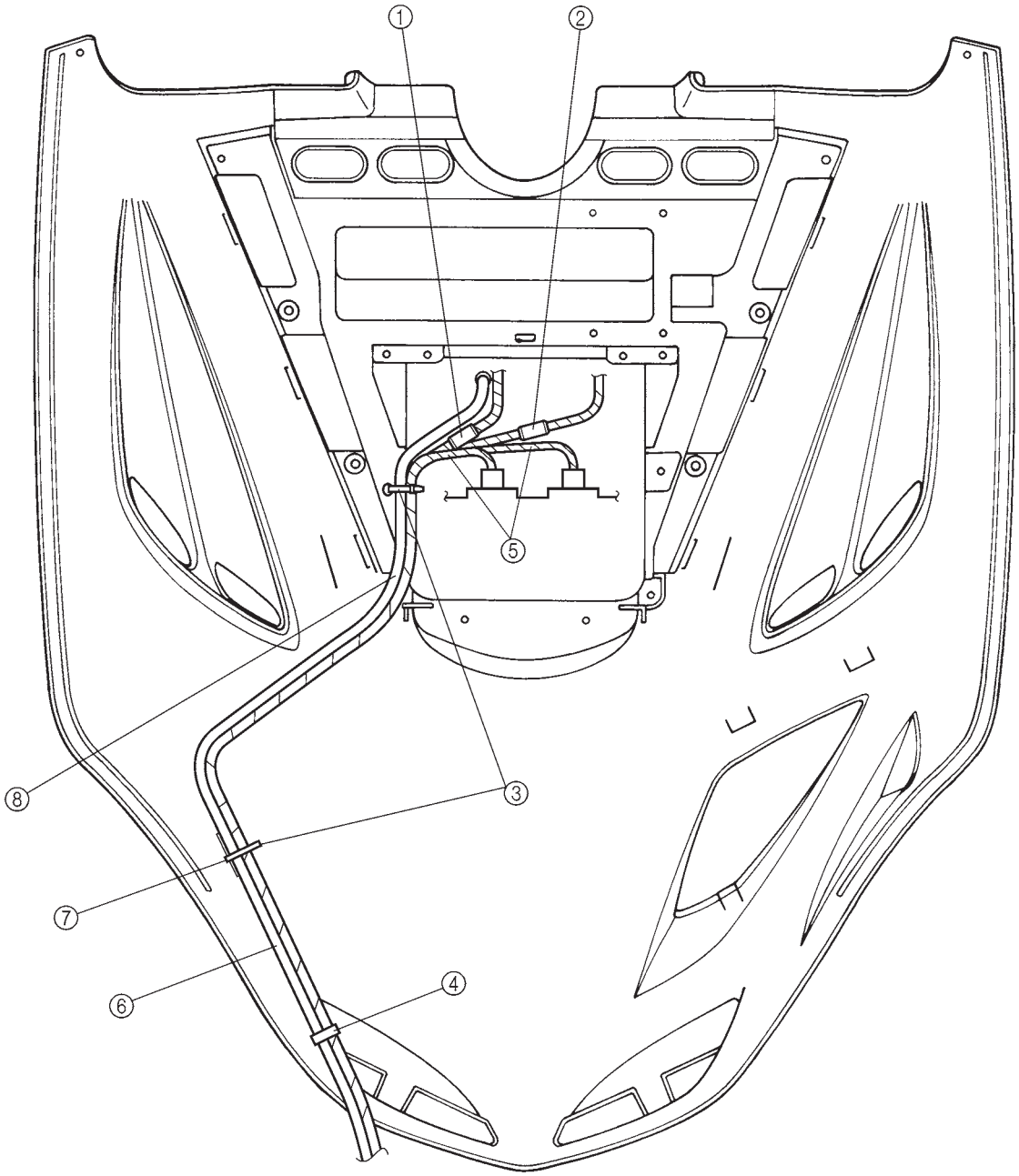

SEA9040

① Speedometer coupler
② Tachometer coupler
③ Plastic band
④ Clamp
⑤ Headlight leads
⑥ Speedometer cable
⑦ Fasten the wire harness and speedometer cable at the white tape mark, with a plastic band.
⑧ Route the wire harness and speedometer cable under the shroud's stopper wire.

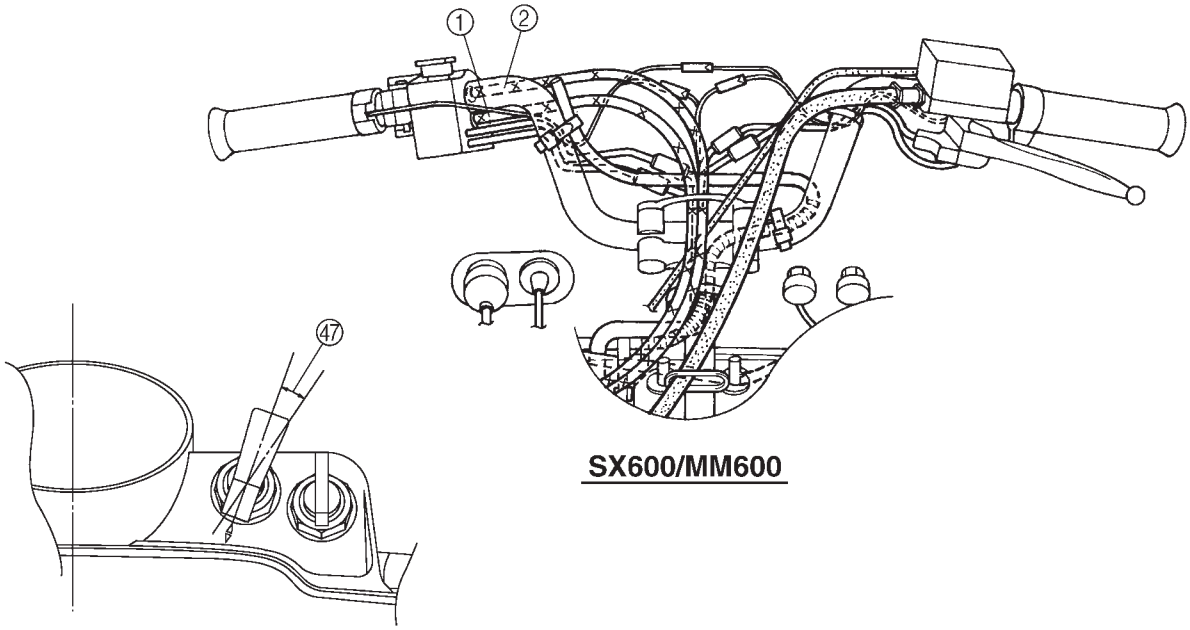

SX600/MM600

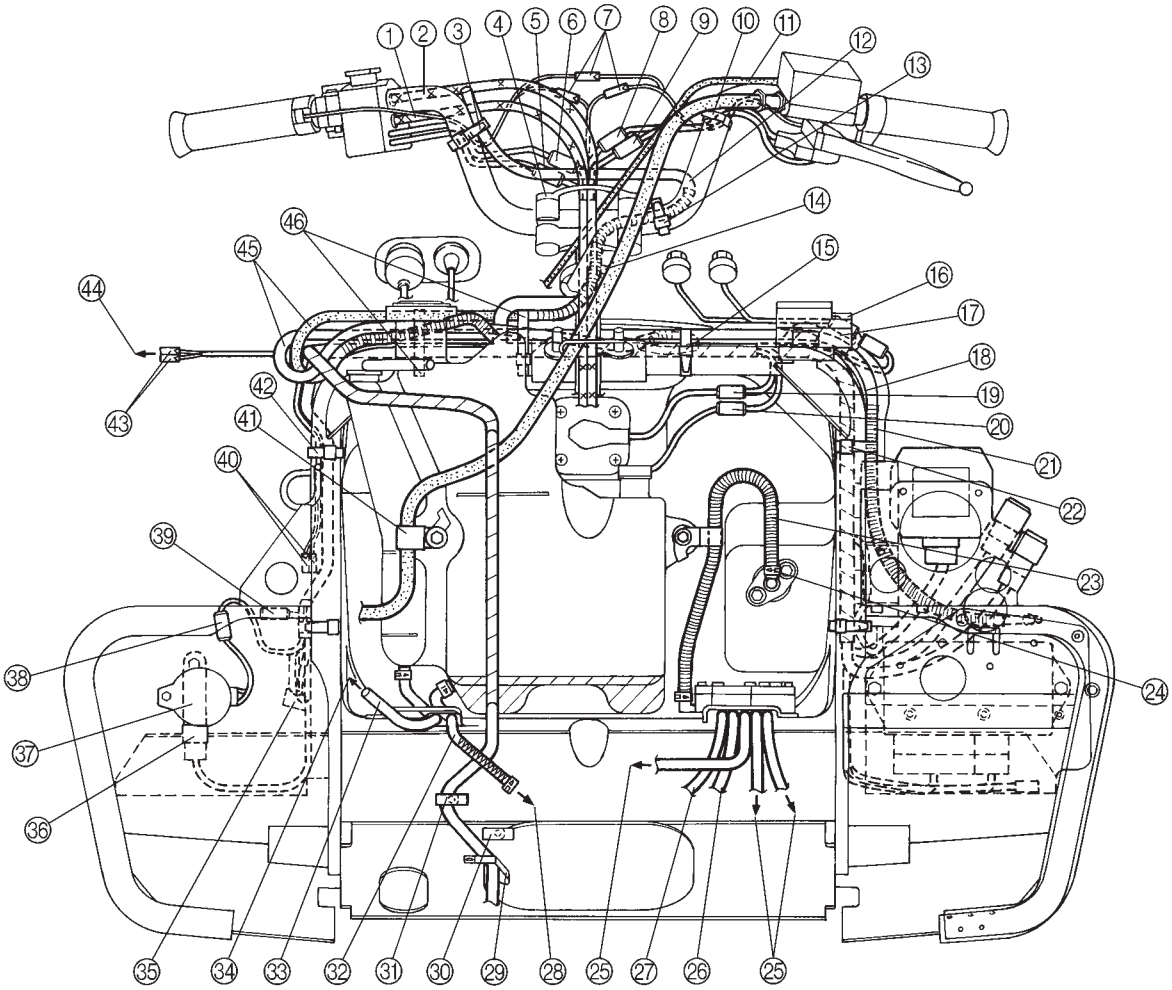

SEA9050

① Oil pump cable
② Throttle cable
③ Do not fasten the throttle cable and oil pump cable.
④ Pass only the throttle, and oil pump cables through the inside of the cable holder.
⑤ Thumb warmer coupler
⑥ Engine stop switch coupler
⑦ Connectors of the grip warmer
⑧ Brake light switch coupler
⑨ Headlight beam switch coupler
⑩ Fasten the brake light switch lead, headlight beam switch lead and grip warmer leads with a plastic band.
⑪ Parking brake cable
⑫ Oil tank breather hose
⑬ Fasten the oil tank breather hose with a plastic band.
⑭ Fasten the wire harness, and the oil tank breather hose behind the steering column, with a plastic band. Do not fasten the parking brake cable and brake hose.
⑮ Fasten the wire harness and fuel tank breather hose with a plastic band, and make sure that the band's end faces downward.
⑯ Fuse box (VX600ER/VT600)
⑰ Condenser coupler (SX600/MM600)
⑱ Ground lead
⑲ Fuel sender coupler
⑳ Oil level switch coupler
㉑ Fuel tank breather hose
㉒ Fasten the fuel tank breather hose, rectifier/regulator leads, CDI unit harness and ground lead with a plastic band.
㉓ Fuel hose
㉔ Fasten the fuel hose clip so that it faces outward.

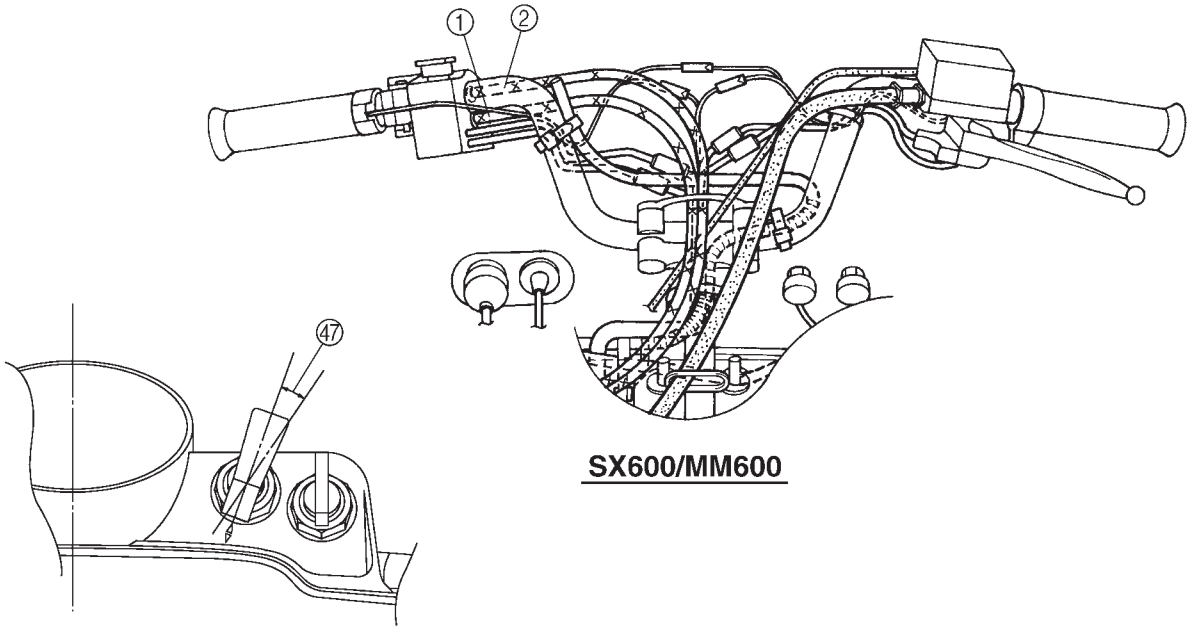

SX600/MM600

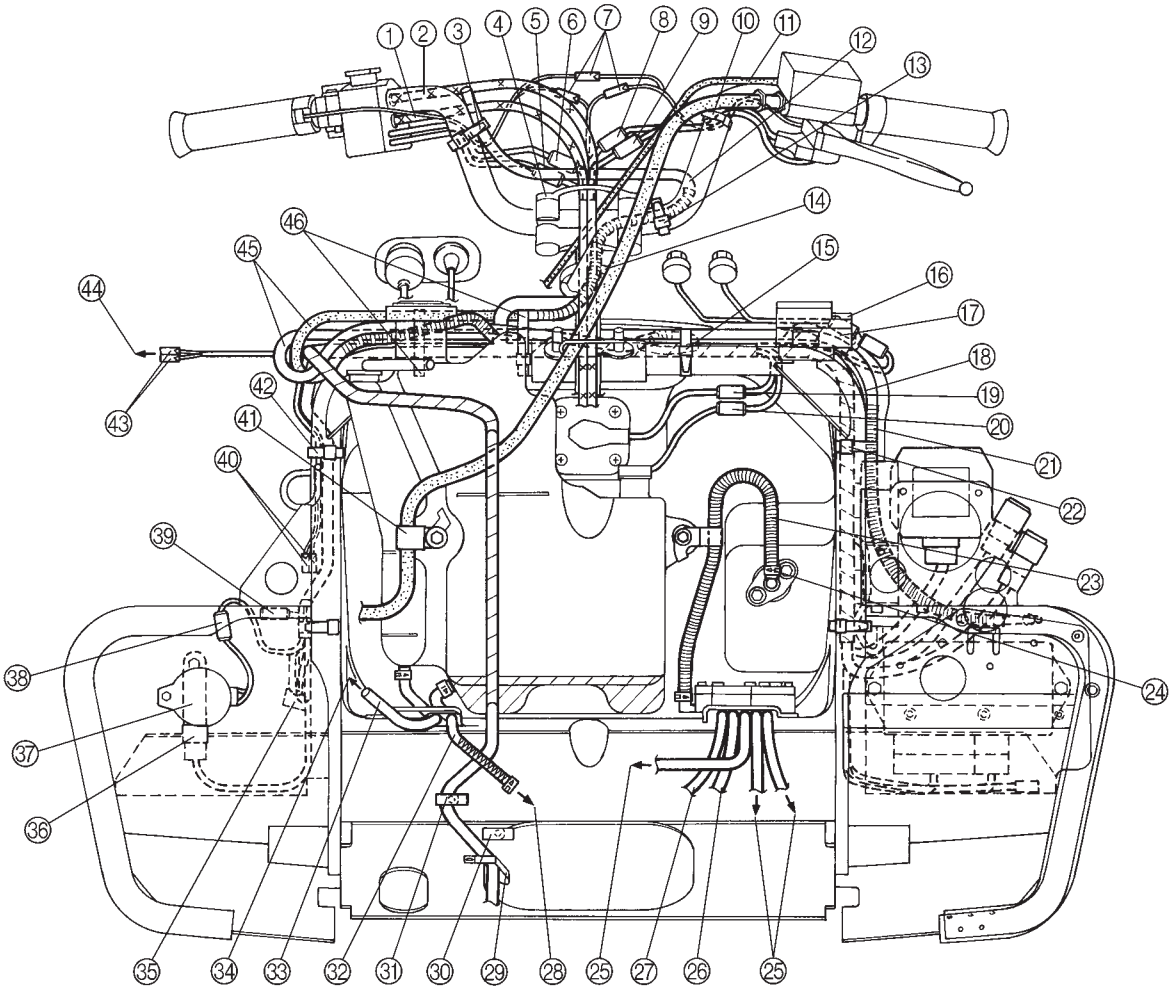

SEA9050

㉕ To the carburetor

㉖ Vacuum hose

㉗ Oil delivery hose

㉘ To the oil pump

㉙ When fastening the wire harness with the attaches clamp, bend the clamp inward to fasten.

㉚ Do not fasten.

㉛ Fasten the wire harness at the white tape mark, with a clamp.

㉜ Oil hose

㉝ Coolant reservoir hose

㉞ To filler cap body

㉟ Passenger grip warmer relay coupler (VX600ER/SX600/MM600)

㊱ Passenger grip warmer relay (VT600)

㊲ DC back buzzer (VX600ER/VT600)

㊳ DC back buzzer coupler (VX600ER/VT600)

㊴ DC back buzzer coupler (SX600/MM600)

㊵ Connectors of the gear position switch (SX600/MM600)

㊶ Pass the brake hose through the hose guide.

㊷ Fasten the wire harness with a plastic band. For the SX600/MM600, include the connectors of the gear position switch.

㊸ Connectors of the gear position switch (VX600ER/VT600)

㊹ To the gear position switch

㊺ Ensure this is not kink.

㊻ Fasten the wire harness, fuel tank breather hose and oil tank breather hose with a plastic band.

㊼ Install the starter lever to the position as illustrated.

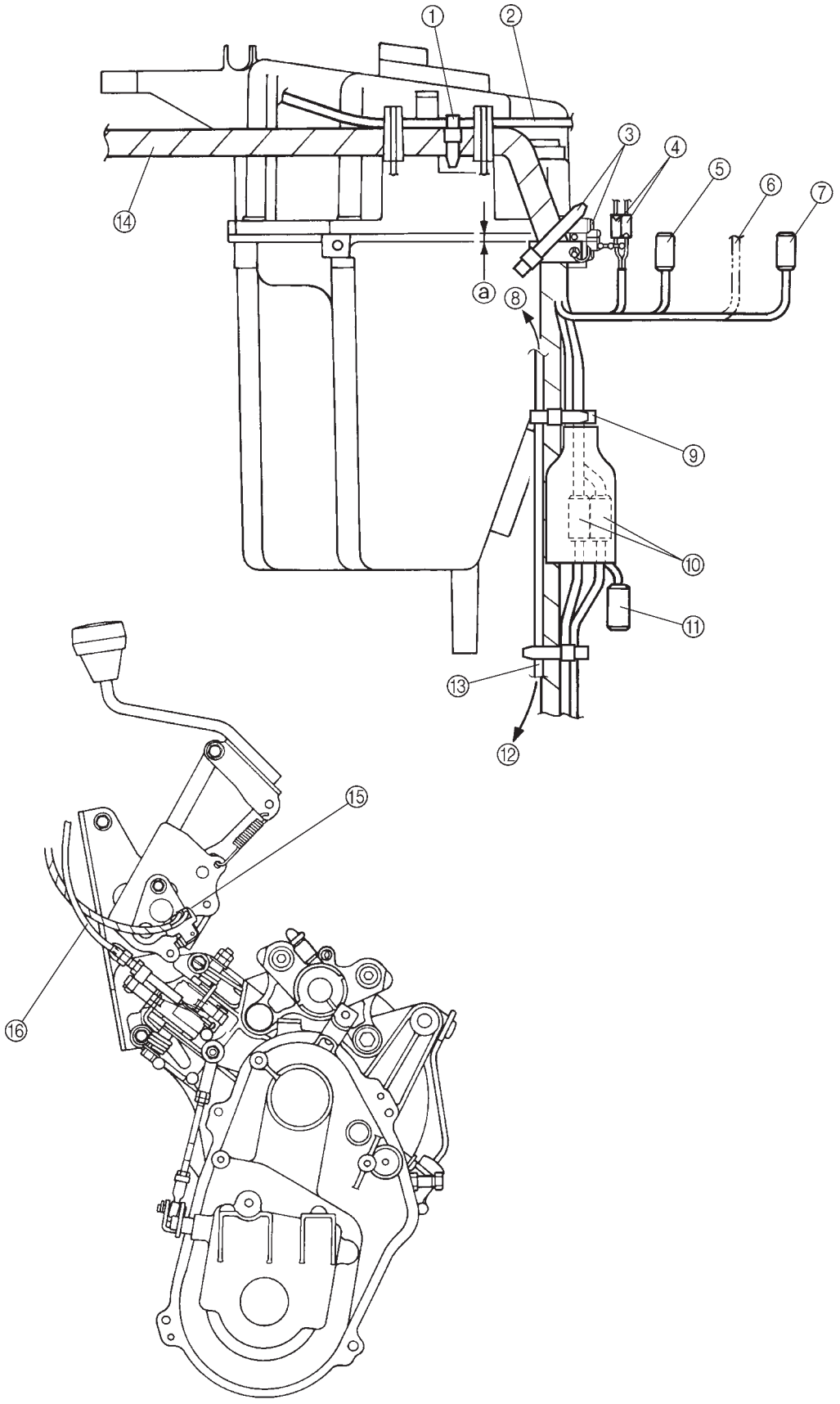

VX600DX/VT600

SEA9060

① Make sure a plastic band is routed through the projection located on the silencer, when fastening it around the wire harness and the starter cable. (VX600ER/VT600)

② Starter cable

③ Make sure the plastic bands are routed through the projection located on the silencer, when fastening them around the wire harness.

④ Connectors of the carburetor switch

⑤ Water temperature sensor coupler

⑥ Starter relay lead (VX600ER/VT600)

⑦ Ignition coil coupler

⑧ To filler cap body.

⑨ Make sure a plastic band is fastened around the wire harness to prevent the coolant reservoir hose from kinking.

⑩ AC magneto couplers

⑪ Starter relay coupler (SX600/MM600)

⑫ To the coolant reservoir tank

⑬ Coolant reservoir hose

⑭ Wire harness

⑮ Gear position switch (VX600ER/VT600)

⑯ Route the parking brake cable outside the gear position switch leads.

ⓐ 0 ~ 5 mm (0 ~ 0.20 in)

WIRING DIAGRAM
VX600ER/SX600/MM600/VT600

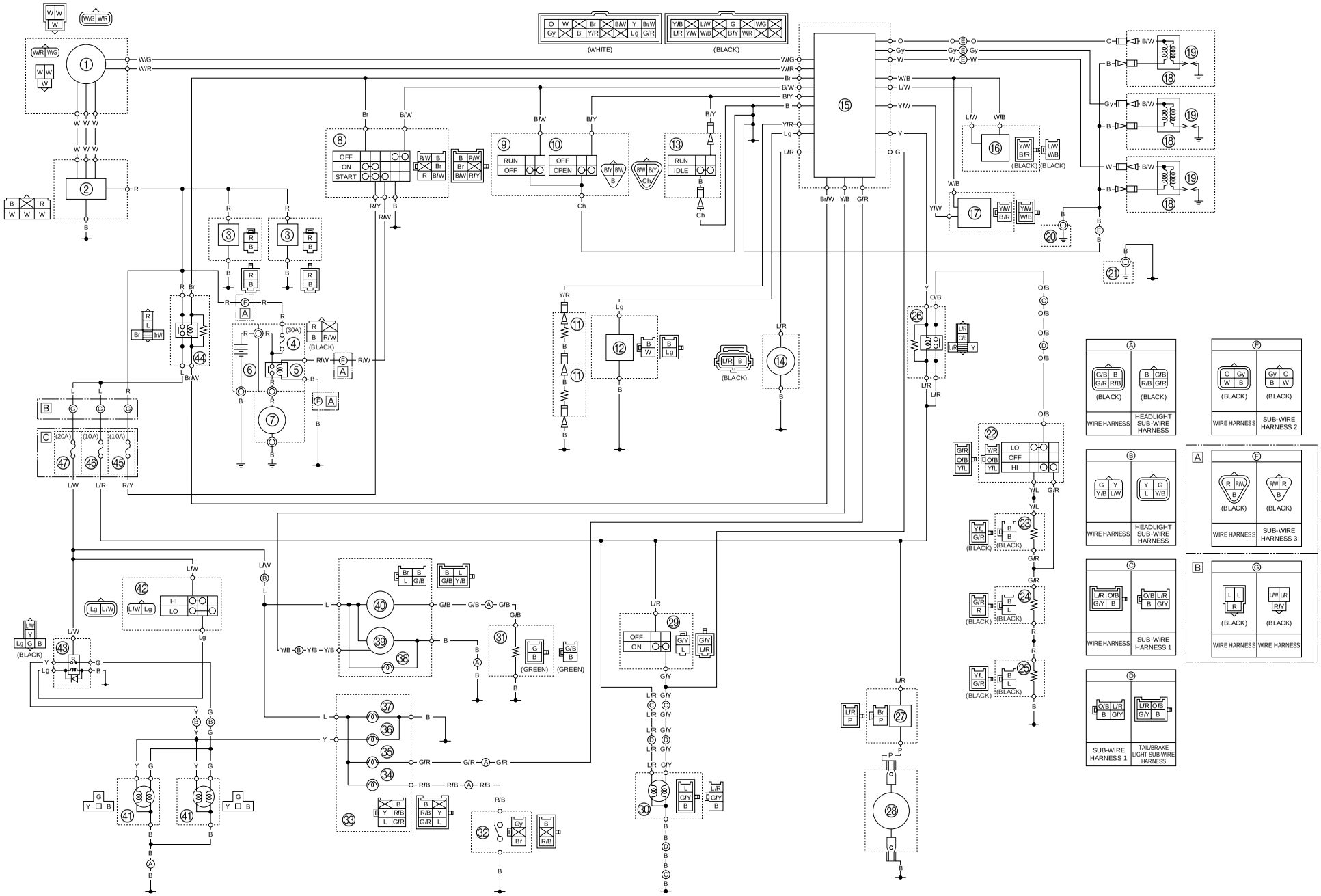

① AC magneto
② Rectifier/regulator
③ Condenser*1
④ Main fuse*2
⑤ Starter relay*2
⑥ Battary*2
⑦ Starter motor*2
⑧ Main switch
⑨ Engine stop switch
⑩ Throttle switch
⑪ Grip warmer
⑫ Thumb warmer
⑬ Carburetor switch
⑭ Water temperature sensor
⑮ CDI unit
⑯ Variable resistor (thumb warmer)
⑰ Variable resistor (grip warmer)
⑱ Ignition coil
⑲ Spark plug
⑳ Engine ground
㉑ Frame ground
㉒ Passenger grip warmer switch*3
㉓ Resistor*3
㉔ Passenger grip warmer (left)*3
㉕ Passenger grip warmer (right)*3
㉖ Passenger grip warmer relay*3
㉗ DC back buzzer*2
㉘ Gear position switch*2
㉙ Brake light switch
㉚ Tail/brake light
㉛ Fuel sender
㉜ Oil level switch
㉝ Speedometer
㉞ Oil level indicator light
㉟ Water temperature indicator light
㊱ High beam indicator light
㊲ Speedometer light
㊳ Tachometer light
㊴ Tachometer
㊵ Fuel meter
㊶ Headlight
㊷ Headlight beam switch
㊸ Headlight relay (with the black coupler)
㊹ Load control relay (with the white coupler)
㊺ “IGNITION” fuse*2
㊻ “TAIL” fuse*2
㊼ “HEAD” fuse*2

*1 SX600/MM600
*2 VX600ER/VT600
*3 VT600

A SX600/MM600
B SX600/MM600
C VX600ER/VT600

COLOR CODE

B	Black
Br	Brown
Ch	Chocolate
G	Green
Gy	Gray
L	Blue
Lg	Light green
O	Orange
P	Pink
R	Red
W	White
Y	Yellow
B/R	Black/Red
B/W	Black/White
B/Y	Black/Yellow
Br/W	Brown/White
G/B	Green/Black
G/R	Green/Red
G/Y	Green/Yellow
L/R	Blue/Red
L/W	Blue/White
O/B	Orange/Black
R/B	Red/Black
R/W	Red/White
R/Y	Red/Yellow
W/B	White/Black
W/G	White/Green
W/R	White/Red
Y/B	Yellow/Black
Y/L	Yellow/Blue
Y/R	Yellow/Red
Y/W	Yellow/White

YAMAHA

PRINTED ON RECYCLED PAPER

Printed in USA (E) CR